LEDVANCE.NO

LEDVANCE

LED-ARMATURER

MAI 2024

SHEDDING LIGHT, SYMBOLS AND ABBREVIATIONS

LIST OF ABBREVIATIONS

ASYM	Asymmetric
AT	Auto Test
BK	Black
CCT	Correlated Color Temperature
D	Direct
DA	Double Asymmetric
D/I	Direct / Indirect
DEG	Degree (beam angle)
DK	Dark Light (cut-off)
DL	Downlight
DN	Diameter Nominal
DP	Damp Proof
DS	Double Symmetric
EM	Emergency
ER	Energy Rail
FL	Flood (beam angle)
Flood	Floodlight
FP	Fire-Proof (fire rated up to …)
GY	Gray
HB	High Bay
HO	High Output
IND	Indirect
INDV	IndiviLED
LN	Linear
MT	Manual Test
MP	Microprismatic (= UGR < 19)
N	Narrow (beam angle)
NFL	Narrow Flood (beam angle)
O	Outdoor
OP	Opal
PFM	Performance
RD	Round
S	Sensor
SF	Surface
SI	Silver
SP	Spot
SQ	Square
Surface-C	Surface Circular
SYM	Symmetric
TH	Through-wiring
Track	Tracklight
UGR	Unified Glare Rating
UO	Ultra Output
VAL	Value
VN	Very Narrow Beam Angle
VW	Very Wide Beam Angle
W	Wide (90° beam)
WT	White
WW	Wallwasher = asymmetric

IP	Type of protection
IP 20 / IP 44	Type of protection, back / front
IK	IK impact rating
CRI	Color rendering index
SDCM ≤3	MacAdam color consistency
	Dimmable or DALI
lm	Luminous flux in lm
W	Power in W
K	Color temperature in K
lm/W	Luminous efficacy
LEDVANCE 5 year guarantee	Guarantee
	Sensor versions
	Motion/light sensor
	Ceiling opening
RE-PLACE-MENT FOR	Replacement for traditional lamp technology
L70	t [h]: L70/B50 @ 25 °C (T_a)
L80	t [h]: L80/B10 @ 25 °C (T_a)
L90	t [h]: L90/B10 @ 25 °C (T_a)
	Beam angle in °
g	Weight
	Unit of packaging
No.	Fig. no.
W / W	Power Select
	Protection class I
	Protection class II
EN	ENEC certification
TÜV SÜD	TÜV Süd certification
TÜVRheinland CERTIFIED	TÜV Rheinland certification
VIVA RES	Compatible with light management systems
IoT READY *	Compatible with cloud services
HCL	Human Centric Lighting
TW	Tunable White

*IoT = Internet of Things. This means that the systems can provide evaluations in the form of dashboards or can be connected to cloud solutions that monitor energy consumption and maintenance cycles, for example.

POWER THROUGH LIGHT

YOUR GLOBAL PLAYER

LEDVANCE

Having emerged from the traditional company of OSRAM and with more than 100 years of lighting know-how behind us, we are now the world's second largest market player in general lighting. Together with the MLS Group, of which we have been a member since 2016, we are contributing to a more sustainable world with our advanced and energy-efficient lighting solutions.

FOR YOUR PROJECTS

TOP SUPPORT

Whether it's lighting advice, customized solutions, energy analyses or feasibility studies, lighting professionals can always rely on LEDVANCE's support – in over 140 countries and many different sectors, from office, education, sports and hospitality to shop, industrial, logistics and street lighting.

LIGHTING FOR MORE

SUSTAINABILITY

Our sustainability tagline "From line to loop" makes our vision to contribute to a greener planet and a better life with intelligent lighting solutions more real. Our new EVERLOOP and NATURELOOP product lines support the transition from linear to circular economic processes, reducing waste, and energy and resource consumption.

A FULL RANGE OF LIGHTING

ONE-STOP SHOP

LEDVANCE offers professional and private users everything from a single source – from lamps, luminaires and LED strips to innovative light management systems and smart home solutions. We have now added pioneering photovoltaic products to our portfolio of all-round excellent lighting solutions.

WE PROUDLY PRESENT OUR

LED LUMINAIRES

In this brochure you will find our LED luminaires for professional use. A wide range and numerous accessories offer the best light in almost every indoor and outdoor application as well as easy integration into lighting management systems such as VIVARES. Our luminaires are not only easy to plan, install and combine. They also blend high functionality with efficiency and sustainability. The best example being the new EVERLOOP Linear IndiviLED luminaires, which support the replacement of essential components and thus save valuable resources.

Discover more on the following pages!

MORE INFORMATION:
ledvance.com/professional

CONTENTS

LEDVANCE LUMINAIRE PORTFOLIO: WHAT'S NEW? 06

DOWNLIGHTS 22

BIOLUX HCL Downlight DALI 24
BIOLUX HCL Downlight Zigbee 26
Downlight UGR19 28
Downlight Comfort 30
Downlight Surface IP65 32
Downlight Alu 34
Downlight Slim Alu 36

STANDARD APPLICATIONS: Public Areas I Shops I Stairways I Corridors Foyers I Bathrooms I Kitchens

PANEL LUMINAIRES 90

BIOLUX HCL Panel DALI Gen 2 92
BIOLUX HCL Panel Zigbee Gen 2 94
Panel IndiviLED 96
Panel Protect 98
Panel Comfort CRI 90 102
Panel Comfort 104
Panel Compact 108
Panel Accessories 112

STANDARD APPLICATIONS: General Indoor Lighting I Public Buildings Offices I Conference Rooms I Corridors

SPOTLIGHTS 38

Spot Vario 42
Spot Multi 44
Spot Combo 46
Spot Combo Accessories 48
Spot Fix 50
Spot Adjust 52
Spot Darklight 54
Spot Fire Rated 56
Spot Air Fix 58
Spot Air Adjust 60
Spot Accessories 62

STANDARD APPLICATIONS: General Illumination I Hotels I Restaurants Cafés I Accent Lighting I Galleries I Museums I Residential Interiors

SUSPENDED AND SURFACE-MOUNTED LUMINAIRES 116

Linear IndiviLED Direct/Indirect Gen 2 118
Linear IndiviLED Direct Gen 2 120
Linear IndiviLED Accessories Gen 2 122
Panel Direct/Indirect 124

STANDARD APPLICATIONS: General Indoor Lighting I Offices I Libraries Schools I Corridors I Entrance Areas

TRACKLIGHTS 64

Tracklight Spot Zoom DIM 66
Tracklight Spot 68
Tracklight Spot Reflector 70

STANDARD APPLICATIONS: Shops I Fashion Stores I Boutiques Department Stores I Hotels I Cafés I Galleries I Museums I Showrooms

LINEAR LUMINAIRES 126

Linear Surface IP44 Gen 2 128
Linear Ultra Output 130
Linear Compact 132
Linear Magnetic Batten T5 134

STANDARD APPLICATIONS: Public Buildings I Corridors I Entrance Areas Stairwells I Cove Lighting I Shelving

WALL AND CEILING LUMINAIRES 72

Surface Compact IK10 74
Surface Circular 76
Surface Circular Accessories 80
Surface Square 82
Surface Square Cover 85
Surface Bulkhead 86
Surface Bulkhead Accessories 89

STANDARD APPLICATIONS: Public Areas I Walkways I Stairways Bathrooms I Foyers

TRUNKING SYSTEMS 136

TruSys Flex 138
TruSys Flex Energy Rails & Accessories 146

STANDARD APPLICATIONS: Factories I Warehouses I Discounters Workshops

FURTHER INFORMATION ON LEDVANCE 236

DAMP-PROOF LUMINAIRES 152

Damp Proof Compact Gen 1 154
Damp Proof Compact Gen 2 156
Damp Proof Gen 2 158
Damp Proof Sensor 162
Damp Proof Special Gen 2 164
Damp Proof Housing 166
Damp Proof Housing Accessories 169
Damp Proof Slim Value 170
Damp Proof Value 172

STANDARD APPLICATIONS: Factories and Warehouses I Parking Lots Underpasses I Garages I Workshops I Production Lines I Agriculture

STREETLIGHTS 218

Streetlight Flex Small 220
Streetlight Flex Medium 222
Streetlight Flex Large 224
Streetlight Flex Accessories 226

STANDARD APPLICATIONS: M-, C- and P-class Roads acc. to EN 13201 I Parking I Public Areas I Industry

HIGH-BAY LUMINAIRES 174

High Bay Gen 4 176
High Bay Gen 3 DALI 178
High Bay Accessories 180
High Bay Compact 182
High Bay Compact Accessories 184

STANDARD APPLICATIONS: Warehouses I Logistics Centers I Industry High Ceilings (e.g. Airports)

EMERGENCY LIGHTING 228

Single-Battery
Emergency Luminaires 229
Emergency Conversion Box 231

STANDARD APPLICATIONS: Escape Routes (Corridors) I Open Areas (Anti-Panic) I Public Buildings I Shops I Offices

LOW-BAY LUMINAIRES 186

Low Bay Flex 188
Low Bay Flex Accessories 190

STANDARD APPLICATIONS: Warehouses I Logistics Halls I Industrial and Storage Facilities I Discounters, Supermarkets

LED DRIVERS FOR CONSTANT CURRENT 232

LED Driver DALI Performance 233
LED Driver Phase-Cut Performance 234
LED Driver Dip-Switch 235

FLOODLIGHTS 192

Floodlight 10 W – 50 W 194
Floodlight 65 W – 200 W 196
Floodlight Sensor 198
Floodlight Photocell 200
Floodlight Compact 202
Floodlight Max 206
Floodlight Max Power Supply 209
Floodlight Performance 210
Floodlight Performance DALI 213
Floodlight Area 216

STANDARD APPLICATIONS: Building Facades I Public Areas Industry I Lighting of large Areas I Sports Facilities I Construction Sites Parking Lots I Underpasses

All the following values for the IP and IK protection classes apply exclusively to luminaires (excluding accessories).

BETTER LIGHT – QUICK AND LED LUMINAIRES FROM LEDVA

FOCUSING ON YOUR NEEDS

LEDVANCE is a strong partner to have by your side when you need to inspire your customers with perfect lighting solutions. We listen carefully to installers and lighting professionals – and are constantly working to improve our products and services. We aim not just to meet your expectations but exceed them – in the choice of products, the quality of the light and simple, user-friendly installation.

We're proving it once again with our revised and greatly expanded luminaire portfolio. Improved in performance and efficiency, and including a number of new products, it now offers you even more options for office, industrial, parking, shop and urban applications.

This allows you to give your customers convincing answers to today's challenges for every project – sustainable lighting solutions that save energy and resources, reduce maintenance costs and combine high functionality with high lighting quality.

TOGETHER FOR BETTER LIGHT

LEDVANCE supports you with a comprehensive lighting portfolio from a single source, an excellent price-performance ratio and guarantees[1] of up to 5 years. But that's not nearly all. Our services are perfectly tailored to the needs of professional users. For example, our global supplier and sales network means we are always at your side wherever you may be. And you can count on us throughout all your lighting projects – from initial consultation to technical after-sales support.

[1] For precise terms and conditions go to www.ledvance.com/guarantee

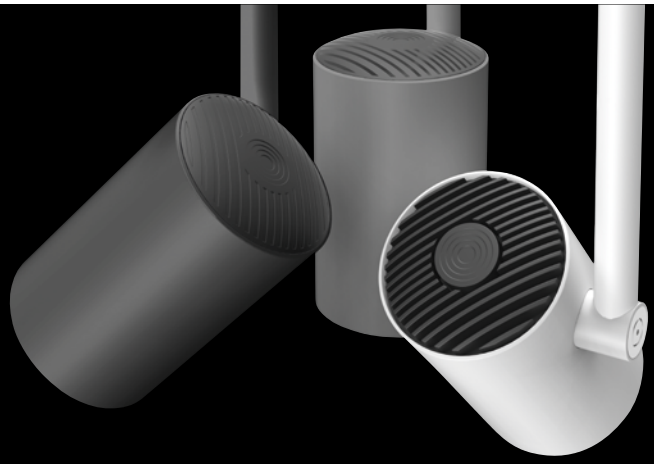

SCALE – AWARD-WINNING LUMINAIRE DESIGN

Design makes products unique – like our individual, aesthetic and functional SCALE design language. It combines unique luminaire design with tangible value in every product and takes the modern tonality of the LEDVANCE brand into new territory. A fascinating combination of form and function, which is loved not only by our customers – as the 2019 German Design Award proves.

EASY TO INSTALL
NCE

YOUR BENEFITS AT A GLANCE

- Global network
- Extensive portfolio from a single source
- Outstanding services

FULL SERVICE FOR YOUR PROJECT SUCCESS

In addition to first-class products and competent customer service (contact@ledvance.com), we support you in numerous other ways throughout your lighting projects. Go to **www.ledvance.com** and discover valuable service concepts such as the Fast Light Calculation Tool, our eLearning modules or the DIALux/RELUX light planning software.

ENGINEER-TO-ORDER LUMINAIRES

Do you need tailor-made luminaires for a project? We are happy to develop a lighting solution adapted to your needs.

Please get in touch to discuss your requirements.

SUSTAINABILITY OUR STRATEGY

SUSTAINABLE SUCCESS – MANY WAYS ONE DIRECTION

Sustainability is a hot topic of our time. But just talking about it isn't enough. Instead we need to back up our good intentions with concrete action. That's why LEDVANCE has come up with a new, comprehensive sustainability strategy to create a solid foundation for aligning the company with a sustainable future.

At LEDVANCE, sustainability is not a destination but a continuous journey. It's about more than just being environmentally conscious; it's about reshaping our practices, reducing our carbon footprint, creating collaborative spaces, and promoting ethical business conduct. This includes new product ranges, reducing CO_2 levels by a million tonnes annually in transportation and improving demand planning with AI.

FROM LINE TO LOOP

WE INTRODUCED THE "LEDVANCE LOOP", A NEW UMBRELLA SUB-BRAND THAT CONSOLIDATES ALL OUR GLOBAL SUSTAINABILITY EFFORTS AND MEASURES.

Our sustainability tagline "From line to loop" refers to LEDVANCE's transition from linear processes (take-make-waste) to circular ones (take-make-reuse + repeat).

SUSTAINABLE WITH OUR SEAL OF APPROVAL

LEDVANCE is aware of its responsibility as a global company.

Just how serious we take our commitment is demonstrated by the silver medal awarded by EcoVadis, one of the world's most renowned providers of sustainability assessments.

SILVER 2023 ecovadis Sustainability Rating

Performance of LEDVANCE in EcoVadis business sustainability rating

LEDVANCE EVERLOOP
THE FUTURE IS CIRCULAR

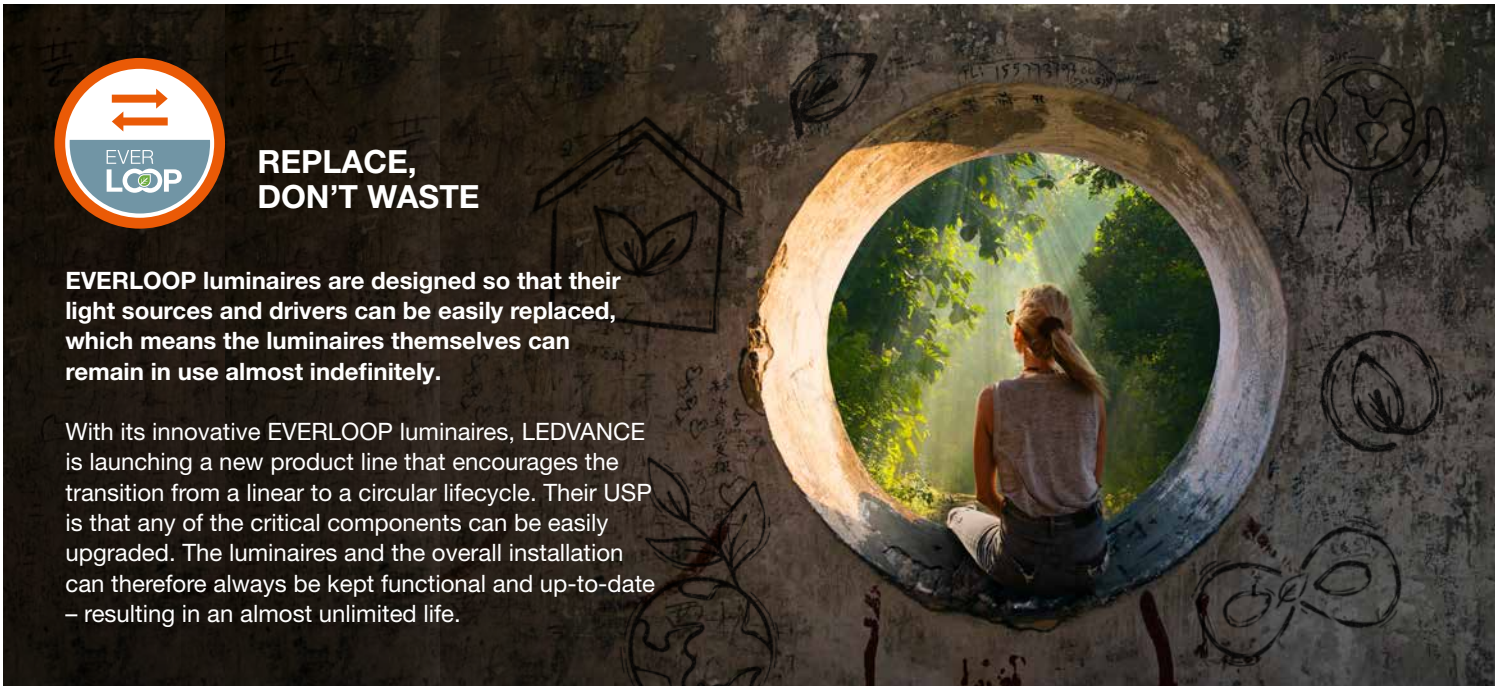

REPLACE, DON'T WASTE

EVERLOOP luminaires are designed so that their light sources and drivers can be easily replaced, which means the luminaires themselves can remain in use almost indefinitely.

With its innovative EVERLOOP luminaires, LEDVANCE is launching a new product line that encourages the transition from a linear to a circular lifecycle. Their USP is that any of the critical components can be easily upgraded. The luminaires and the overall installation can therefore always be kept functional and up-to-date – resulting in an almost unlimited life.

YOUR BENEFITS AT A GLANCE

LESS WASTE
The only components that get replaced are the ones that are either faulty or out of date. This reduces electronic waste – in line with future EU requirements. And the savings go on and on because the old components are recycled and materials used to manufacture new products.

LONG LIFE
Once installed, an EVERLOOP luminaire can be in use almost indefinitely. Not only is that a good example of sustainability, it also saves costs in the long term.

FUTURE-PROOF SOLUTION
Increasingly more tenders, projects and funding programs have repairability as one of their requirements. With EVERLOOP you are always on the safe side.

CONVENIENT UPGRADES
The LED light sources and drivers can be easily replaced so you can adapt EVERLOOP luminaires to changing conditions in an instant.

View the first EVERLOOP luminaire family, Linear IndiviLED Gen 2 on pg. 117.

HOW EVERLOOP WORKS IN DETAIL

EVERLOOP luminaires are well thought-out right down to the finest detail and are highly functional. This makes installing them and replacing critical components particularly easy, as shown in this example of the Linear IndiviLED Gen 2.

EVERLOOP VIDEO
See how simple the EVERLOOP principle is.

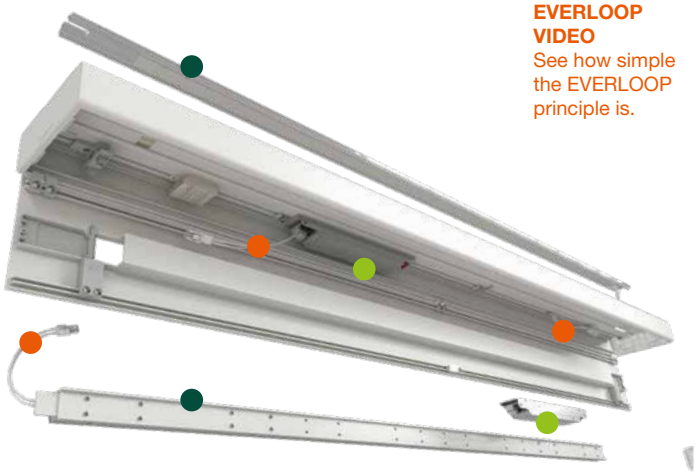

LED LIGHT SOURCE
Easy to change

LED DRIVER
With quick-release mechanism

CONNECTOR
Easy to connect

SIMPLY SWITCH TO LED NOW!
FLEXIBLE SOLUTIONS FOR AN EASY SWITCH

The ban on mercury-containing and inefficient lamps has been in force since 2023. With high energy costs and increasing demand for sustainable lighting, now is the best time to move over to EU-compliant, energy-efficient and cost-effective LED lighting.

LEDVANCE offers an alternative for every need with a comprehensive range of luminaires, intelligent lighting products and advanced LED lamps. The solutions with LED lamps are simple and economically attractive as the luminaire can be retained. Switching to LED luminaires can also optimize light output and quality, which can also significantly increase productivity.

4 OPTIONS FOR ALL SITUATIONS – HOW TO SWITCH

SOLUTIONS WITH LED LAMPS

RETROFIT

Switching from fluorescent lamps to LED lamps in existing luminaires is quick, easy and economical – either as retrofits or conversions.

Simple 1:1 replacement:
- Wide range of LED tubes for easy, quick and safe lamp replacement
- No rewiring necessary
- As a replacement for fluorescent tubes operated on CCG or compatible ECG
- Find the right LED tube in just a few steps with the handy Tube Finder

Go directly to the Tube Finder: **ledvance.com/tubefinder**

CONVERSION

If there is no retrofit alternative or if the customer values maximum energy savings and low maintenance, rewiring is the solution.

1. **LED tube on mains voltage:** Particularly quick and application-oriented with the conversion kit and the matching range of T5 and T8 LED tubes
2. **LED Tube External System: T5/T8 LED tube and external driver:** The perfect solution for switching from old fluorescent lamps and dimmable DALI control gear to efficient and dimmable LED technology

SOLUTIONS WITH LED LUMINAIRES

UPGRADE

If the focus is on optimal light output and quality, maximum efficiency and perhaps added benefits, it's worth upgrading the luminaires or installing new ones.

Upgrade using the luminaire-in-luminaire principle:
- If an exisiting luminaire needs to be kept but electric or mechanical interfaces are too old for a retrofit or conversion
- Positioning and mounting using adjustable magnets
- Quick, tool-free rewiring thanks to connector box
- Designed for use with T5 AC LED tubes
- Available in three different lengths

NEW INSTALLATION

Complete replacement with modern LED luminaires:
- If the existing housing or other components have reached the end of their life
- If lighting performance requirements have changed (e. g. light distribution or quality)
- If a light management system needs to be integrated, or there's an upgrade to human centric lighting
- If aesthetical or functional design requirements have changed
- Long life and maximum potential for energy savings

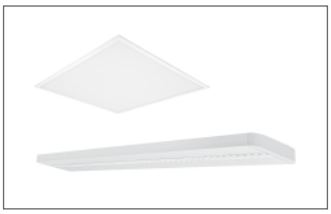

YOUR SHORTCUT TO THE RIGHT LED LAMP ALTERNATIVE

Go directly to the Lamp Finder: **ledvance.com/lampfinder**

NOT SURE WHAT TO CHOOSE?

LEDVANCE takes care of tailor-made calculations and offers you a customized solution for your lighting requirements – all from a single source. Please get in touch.

Email: contact@ledvance.com
Phone: +49 89 780673-660

LIGHT MANAGEMENT IS VIVARES

VERSATILE AND POWERFUL SOLUTIONS

More sustainable and efficient with less energy?

The VIVARES light management systems from LEDVANCE save up to

80 %

CO_2 and energy in office lighting when you upgrade a fluorescent solution to LED products at the same time[1].

Further information about VIVARES products can be found at:

ledvance.com/lms

Are you looking for efficient, intelligent and environmentally friendly lighting? One thing is clear: You can only achieve maximum energy savings by using lighting control – after switching to LED. With the VIVARES light management systems, LEDVANCE offers both single room solutions up to 200 m² and floor solutions up to 1 000 m². Benefit from:

- control units, luminaires, LED tubes and lamps, sensors and pushbutton couplers from one supplier
- simple configuration and commissioning from plug and play to more complex, customizable solutions or app control
- individual support – from lighting planning to commissioning of the system and on-site instruction
- comprehensive after-sales service
- a 5-year system guarantee

A SERIOUS REDUCTION IN THE GLOBAL WARMING POTENTIAL

Around 90 % of a luminaire's environmental impact occurs during its use phase. Switching from fluorescent to LED tubes is therefore a crucial step in reducing the Global Warming Potential (GWP) of lighting. **Very important:** The more efficient a luminaire (lm/W), the lower its GWP. The lighting solution's efficiency can be increased further in combination with sensor-controlled light management systems, even if the efficiency of the individual luminaires has already been fully exploited.

Source: LEDVANCE white paper www.ledvance.com/gwp

[1] Potential savings of an optimized sensor-controlled LED lighting system compared to a conventional system with fluorescent tubes

ONE ROOM, MANY SOLUTIONS

VIVARES offers solutions for single rooms with a size of up to 200 m² based on individually configured light management systems, including up to 50 DALI or 40 Zigbee components and luminaires. Simple, intuitive control from manual and automated lighting control with sensors to app solutions.

YOUR BENEFITS:

- Clear: one room, one system – install and forget
- Simple: fully functional LMS following installation
- Flexible: manual and automatic lighting control
- Energy-efficient: optimal energy savings achieved through lighting control – after switching to LED
- Feel-good factor: the BIOLUX HCL human centric lighting system for a positive biological effect with a possible increase in productivity
- Customizable: Tunable White solutions with adjustable light colors thanks to a wide range of VIVARES control units

FOR EXISTING AND NEW BUILDINGS THANKS TO DALI OR WIRELESS ZIGBEE TECHNOLOGY

VIVARES ZIGBEE SYSTEMS, WIRELESS

- Ideal for use in existing buildings
- Based on the international Zigbee 3.0 standard
- Quick and easy installation; commissioning via QR code
- Uncomplicated reconfiguration of components if the use of rooms changes

VIVARES DALI SYSTEMS, WIRED

- Particularly suitable for new buildings
- Components certified to DALI-2 standard
- Extensive portfolio for office applications
- Simple commissioning with self-explanatory software
- Optional: integrated IoT* gateway

MANY ROOMS, ONE SOLUTION

One light management system for an entire floor? No problem for VIVARES DALI and Zigbee control units. One centrally controlled system can be used across multiple rooms (up to 1 000 m²) with optional IoT* functions. However, the lighting of each room within the floor solution can still be controlled and adjusted separately. Lighting options such as scenes or Tunable White and human centric lighting personalize the light in rooms.

YOUR BENEFITS:

- Versatile: one system for all requirements
- Independent: remote access without needing to be present to configure the light management system
- Transparent: optional VIVARES cloud services with energy consumption monitoring and maintenance management – always keeping an eye on costs
- Just in time: time settings for individual lighting scenes
- All options: from standard monochromatic light and Tunable White to biologically effective light with the BIOLUX HCL human centric lighting system through DALI Pro2 IoT control unit

*IoT = Internet of Things. This means that the systems can provide evaluations in the form of dashboards or can be connected to cloud solutions that monitor energy consumption and maintenance cycles, for example.

Find the right luminaires and components on our website: **ledvance.com/lms**

LIGHT MANAGEMENT CAN BE SO EASY!

NOW TWICE AS NICE!

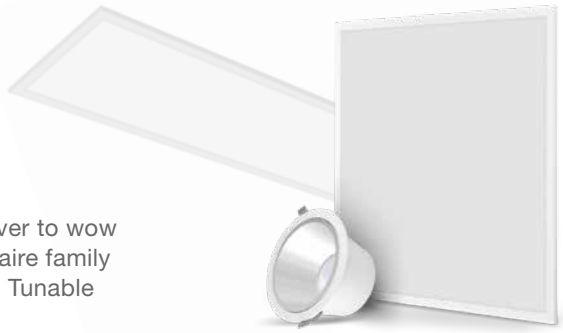

OUR NEW GENERATION OF DALI-2 LUMINAIRES FOR TUNABLE WHITE AND HCL APPLICATIONS.

Our new generation of DALI-2 IoT[1] luminaires makes it easier than ever to wow your customers with modern light management solutions. The luminaire family has become more versatile, powerful and efficient, and is fit for both Tunable White and BIOLUX HCL applications. Discover the possibilities!

DALI-2 IOT[1] LUMINAIRES GEN 2 – FIT FOR BIOLUX HCL OR TUNABLE WHITE APPLICATIONS

Product name	Segmentation	GTIN (EAN)	W	lm	lm/W	K	°		L × W × H [mm] Ø × H [mm]
BIOLUX HCL PANEL TW DALI								WARM COOL / DALI-2 / UGR <19 / CRI >90 / SDCM ≤3 / 5 YEARS GUARANTEE[2]	
BIOLUX HCL PL 600 S 40W TW DALI	■	4099854**140068**	40	4 600	115	2 700...6 500	90	DALI2	595 × 595 × 11
BIOLUX HCL PL 625 S 40W TW DALI	■	4099854**140167**	40	4 600	115	2 700...6 500	90	DALI2	620 × 620 × 11
BIOLUX HCL PL 625 S 40W TW CSW[3] DALI	■	4099854**140273**	40	4 600	115	2 700...6 500	90	DALI2	620 × 620 × 11
BIOLUX HCL PL 1200 S 37W TW DALI	■	4099854**140228**	37	4 100	102	2 700...6 500	90	DALI2	1 195 × 295 × 11
BIOLUX HCL DOWNLIGHT TW DALI									
BIOLUX HCL DL DN150 S 21W TW DALI	■	4099854**140310**	21	2 200	105	2 700...6 500	60	DALI2	175 × 99

All luminaires support DALI-2 Energy Data (DALI part 252) and DALI-2 Diagnostic Data (DALI part 253). The Panel luminaires can be combined with accessories for e.g. surface mounting and suspension.
You can find them here: ledvance.com/panel-accessories

[1] IoT = Internet of Things. This means that the systems can provide evaluations in the form of dashboards or can be connected to cloud solutions that monitor energy consumption and maintenance cycles, for example. | [2] Refer to www.ledvance.com/guarantee for precise conditions | [3] With pre-mounted Wago connector

HUMAN CENTRIC LIGHTING SYSTEM

THE LIGHT FOR MORE WELL-BEING

- Simulation of the natural daylight curve creating a positive biological effect
- Automated control but adjustable if desired
- Energy/cost savings since less brightness required in the mornings and evenings
- Up to 30 % additional savings with daylight/presence sensors

RECOMMENDED CONTROLLER: DALI PRO2 IOT LDVV

- Programmed using data from a light curve based on scientific studies
- Complements DALI-2 IoT luminaires to create an HCL system for single and open-plan offices

The system simulates the natural daylight curve which can boost well-being of people.

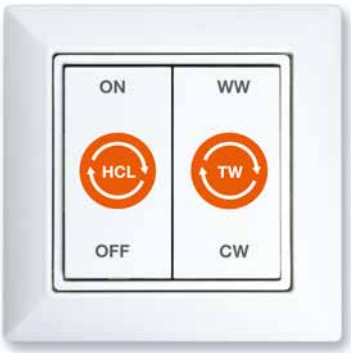

TUNABLE WHITE SYSTEMS

THE LIGHT THAT CAN BE PERSONALIZED

- Light color and brightness manually adjustable based on preferences and activity
- Choice of light colors from 2 700 K to 6 500 K
- Brightness adjustable from 1 – 100 %
- Greater energy savings in combination with daylight/presence sensors

RECOMMENDED CONTROLLERS FROM OSRAM: DALI MCU TW, DALI PCU TW, DALI ECO BT, DALI ACU BT

- DALI-2 luminaires compatible with many other Tunable White capable DALI-2 controllers
- From one source at LEDVANCE or third parties
- From entire floor solutions to single room solutions, LEDVANCE offers both

The staff room is used by different people. The light color can be adjusted manually to suit personal preferences.

Find the right luminaires and components on our website: **ledvance.com/hcl**

OFFICE
LIGHT AS A FACTOR FOR SUCCESS

DOWNLIGHT UGR19
Page 28

DOWNLIGHT COMFORT
Page 30

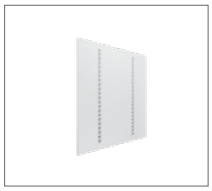

PANEL INDIVILED
Page 96

PANEL COMFORT
Page 104

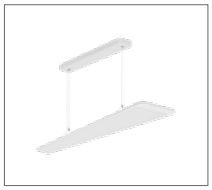

PANEL DIRECT/ INDIRECT
Page 124

LINEAR INDIVILED GEN 2
Page 118

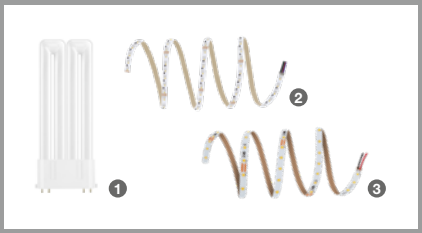

THE RIGHT LAMPS AND LED STRIPS:

From the ultra-low-profile DULUX LED F 1 LED lamp featuring excellent luminous efficacy all the way to the flexible LED STRIP PERFORMANCE RGBW 2 and WHITE 3, LEDVANCE offers you tailored lighting solutions for large and small offices.

REFERENCE PROJECT

PROJECT: FENIE ENERGÍA, Madrid, Spain

APPLICATION: Office lighting
TECHNOLOGY: LED technology

LEDVANCE PRODUCTS: PANEL COMPACT 600 U19 DALI, DOWNLIGHT ALU

LEDVANCE designed and implemented a comprehensive and interactive lighting concept for the office building of FENIE ENERGÍA in Madrid, covering the office and communal spaces, as well as the entrance area. This included the use of LED Downlights and Panel lights in combination with daylight and motion sensors, allowing for significantly more efficient and demand-oriented light control. It has also enhanced workplace-specific light quality and reduced maintenance efforts.

INDUSTRY
LIGHT MAKES HARD WORK EASIER

TRUSYS FLEX
Page 138

DAMP PROOF COMPACT GEN 1
Page 154

DAMP PROOF SPECIAL GEN 2
Page 164

HIGH BAY GEN 4
Page 176

HIGH BAY GEN 4 SENSOR
Page 177

LOW BAY FLEX
Page 188

THE RIGHT LED TUBES:

LED TUBE T8 EM ULTRA OUTPUT S 1 tubes are shatterproof, highly efficient and durable. They replace conventional fluorescent tubes and are suitable for use even in adverse conditions such as in cold stores and warehouses.

REFERENCE PROJECT

PROJECT: BMB Natursteen, Wortegem-Petegem, Belgium

APPLICATION: Warehouse and production hall LED lighting solution
TECHNOLOGY: LED technology

LEDVANCE PRODUCTS: DAMP PROOF THROUGHWIRING

LEDVANCE, together with installer Velektro, developed and implemented a robust LED-based lighting concept for the production and storage premises of BMB Natuursteen in Wortegem-Petegem, Belgium. This has increased energy efficiency, reduced costs and effort for maintenance and, thanks to the significantly improved light quality, also increased comfort for visitors and occupational safety for employees.

PARKING
LIGHT MEANS SAFETY & SECURITY

SURFACE BULKHEAD
Page 86

DAMP PROOF SENSOR
Page 162

DAMP PROOF HOUSING
Page 166

FLOODLIGHT SENSOR
Page 198

FLOODLIGHT PERFORMANCE
Page 210

STREETLIGHT FLEX SMALL
Page 220

THE RIGHT LED TUBES, HQL LED LAMPS AND LED STRIPS:

For indoor parking, LEDVANCE offers the LED TUBE T8 EM CONNECTED P (1) together with the CONNECTED SENSOR (2). Efficient, high-output HQL LED PRO lamps (3) are ideal for outdoor use. And for both applications, LED STRIP PERFORMANCE PROTECTED (4) provides great design freedom.

REFERENCE PROJECT

PROJECT: Tirol Kliniken, Innsbruck, Austria

APPLICATION: Lighting of underground garages
TECHNOLOGY: LED technology

LEDVANCE PRODUCTS: LED DAMP PROOF

In the underground garages of the Medical Center and Surgery West the former luminaires equipped with fluorescent tubes were replaced by new 30 watt LED DAMP PROOF luminaires. Due to their robust design with an IP65 protection rating and IK08 impact resistance these are not only ideal for use in damp and dusty environments, but their beam angle of 105 degrees also ensures homogeneous uniform light giving a greater feeling of safety for employees and visitors.

SHOP
AESTHETIC ILLUMINATION MEETS FUNCTIONALITY

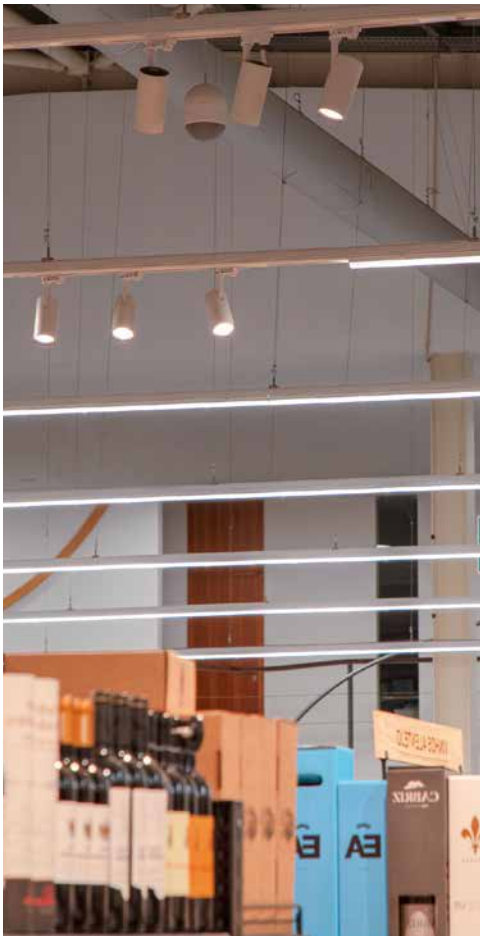

SPOT VARIO
Page 42

SPOT MULTI
Page 44

SPOT ADJUST
Page 52

TRACKLIGHT SPOT ZOOM DIM
Page 66

TRACKLIGHT SPOT
Page 68

TRUSYS FLEX
Page 138

THE RIGHT LED REFLECTOR AND TUBE LAMPS AS WELL AS LED STRIPS:

LEDVANCE lighting solutions – including fully dimmable LED reflector lamps 1, flexible LED STRIP SUPERIOR TUNABLE WHITE 2 lights and LED TUBE T8 EM FOOD P 3 for food retailers – present all your merchandise in the best light.

REFERENCE PROJECT

PROJECT: Supermarket lighting E.LECLERC, Lousada, Portugal

APPLICATION: LED lighting for the supermarket's clothing and wine department
TECHNOLOGY: LED technology

LEDVANCE PRODUCTS: TRACKLIGHT SPOT, TRUSYS

A better overall quality of light, greater attention for specific areas and contemporary energy efficiency. These were the requirements that the managers of E.LECLERC supermarket in Lousada, Portugal, outlined when they approached LEDVANCE. The lighting experts came up with an extremely impressive solution. Thanks to their high luminous flux, a total of 450 luminaires in the TRUSYS system produce uniformly bright, efficient basic lighting. On top of that, tilt and swivel TRACKLIGHT SPOTS featuring excellent color rendering of CRI > 90 highlight the goods to best effect. This is a whole new shopping experience for supermarket customers.

LUMINAIRE VARIETY COMES PRODUCT CLASS SYSTEM

Your work involves everything from simple lighting tasks to the most complex and demanding – and it is precisely this bandwidth that is covered by LEDVANCE's luminaire portfolio. To ensure that you always keep track of all this variety and quickly find the most suitable product, we have divided our luminaires into three segments: Superior Class, Performance Class and Value Class. With the help of consistent color coding and clear labeling you can immediately see in the catalog and also on the packaging which of the three segments a luminaire belongs to. So you can easily meet the needs of your customers – today and tomorrow.

Clear color coding on the new sustainable packaging will help you keep track of the products and quickly identify the right product for the job.

Sample packaging

PRODUCT CLASSES:

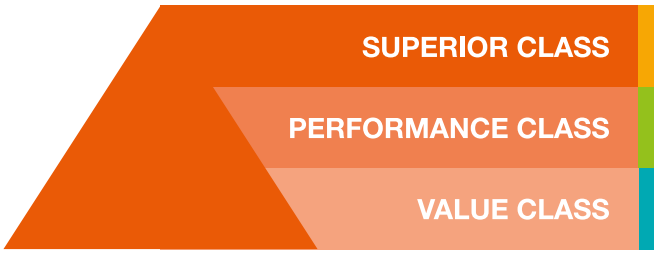

IN THREES:

SUPERIOR CLASS

Sometimes only the best will do. The LEDVANCE Superior Class range comprises premium products that set standards in technology, quality and design. These top-of-the-line products are impressive in every respect and are the right choice for realizing particularly demanding, prestigious projects with special lighting requirements.

PERFORMANCE CLASS

In the LEDVANCE Performance Class you will find a reliable solution for the majority of your lighting tasks. Our core portfolio includes a wide range of high-quality, demand-oriented luminaires with excellent performance in terms of lifetime, efficiency, material and quality of light. Features such as easy installation, DALI versions and comprehensive guarantees add value.

VALUE CLASS

High performance at an attractive price – that's what the LEDVANCE Value Class is about. The luminaires in this range are characterized by a standard lifetime, efficiency and quality of light, making them the right choice for everyday installation needs and projects where, in addition to reliability, the focus is on cost-effectiveness in particular. Additional features such as DALI extend the range of applications in this class.

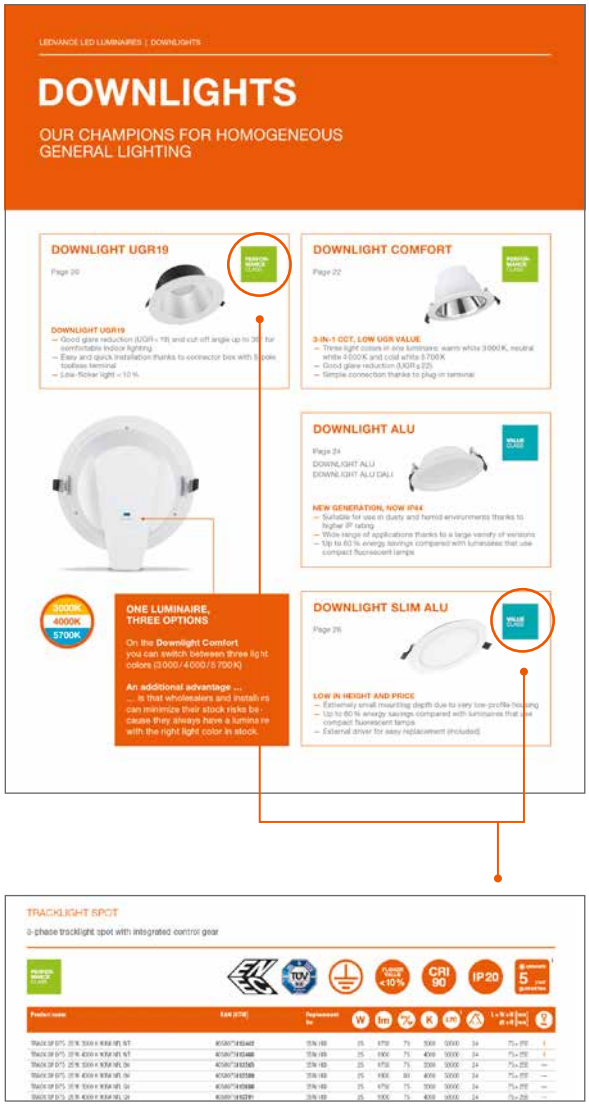

KEEPING TRACK – FINDING YOUR WAY AROUND THE BROCHURE AND RANGE

The clear Product Class System of the LEDVANCE luminaire portfolio is also reflected in the introductory pages of each chapter and the product pages of this brochure. Each product class has been assigned a color that you can find throughout the catalog. This makes finding suitable luminaires easier and faster than ever.
Go on, give it a try!

DOWNLIGHTS

OUR CHAMPIONS FOR HOMOGENEOUS GENERAL LIGHTING

DOWNLIGHT TUNABLE WHITE

SUPERIOR CLASS

Page 24

BIOLUX HCL DOWNLIGHT DALI
BIOLUX HCL DOWNLIGHT ZIGBEE

DOWNLIGHTS WITH TUNABLE WHITE
- Adjustable color temperature via Tunable White: 2 700...6 500 K
- Compatible with VIVARES cloud services
- Suitable for light management systems

DOWNLIGHT UGR19

PERFOR-MANCE CLASS

Page 28

DOWNLIGHT UGR19
- Good glare reduction (UGR < 19) and cut-off angle up to 30° for comfortable indoor lighting
- Easy and quick installation thanks to connector box with 5-pole toolless terminal
- Low-flicker light < 10 %

DOWNLIGHT COMFORT

PERFOR-MANCE CLASS

Page 30

3-IN-1 CCT, LOW UGR VALUE
- Three light colors in one luminaire: warm white 3 000 K, neutral white 4 000 K and cold white 5 700 K
- Good glare reduction (UGR ≤ 22)
- Simple connection thanks to plug-in terminal

DOWNLIGHT SURFACE IP65

PERFOR-MANCE CLASS

Page 32

FOR DEMANDING APPLICATIONS
- Suitable for use in dusty and damp locations thanks to high IP65 rating
- Suitable for use in public areas thanks to high IK06 rating
- Push wire terminal for tool-free connection

DOWNLIGHT ALU

VALUE CLASS

Page 34

DOWNLIGHT ALU
DOWNLIGHT ALU DALI

NEW GENERATION, NOW IP44
- Suitable for use in dusty and humid environments thanks to higher IP rating
- Wide range of applications thanks to a large variety of versions
- Up to 60 % energy savings compared with luminaires that use compact fluorescent lamps

DOWNLIGHT SLIM ALU

VALUE CLASS

Page 36

LOW IN HEIGHT AND PRICE
- Extremely small mounting depth due to very low-profile housing
- Up to 60 % energy savings compared with luminaires that use compact fluorescent lamps
- External driver for easy replacement (included)

ONE LUMINAIRE, THREE OPTIONS

On the **Downlight Comfort** you can switch between three light colors (3 000 / 4 000 / 5 700 K)

An additional advantage …
… is that wholesalers and installers can minimize their stock risks because they always have a luminaire with the right light color in stock.

OVERVIEW OF MOUNTING DIAMETER FOR ALL DOWNLIGHTS

PRODUCT	MOUNTING Ø (mm)
DOWNLIGHT TUNABLE WHITE	155, 160
DOWNLIGHT UGR19	155, 195
DOWNLIGHT COMFORT	130, 155, 205
DOWNLIGHT SURFACE IP65	90, 160, 250 (surface only)
DOWNLIGHT ALU	150, 200
DOWNLIGHT SLIM ALU	180, 205

BIOLUX HCL DOWNLIGHT DALI

Downlight luminaires, Tunable White, 105 lm/W, tool-free installation, DALI-2 IoT technology

PRODUCT FEATURES

- IoT-ready luminaire with DALI-2 technology
- Adjustable color temperature via Tunable White: 2 700…6 500 K
- Very high color rendering index Ra: > 90
- Suitable for central battery emergency installations acc. to EN 60598-2-22

PRODUCT BENEFITS

- Suitable luminaire for VIVARES DALI, VIVARES DALI HCL and other DALI-2 light controls
- Enables an individual Tunable White lighting solution in combination with compatible DALI-2 lighting controls
- Supports LEDVANCE Human Centric Lighting in conjunction with DALI PRO 2 IOT LDVV Controller (4052899627079)
- Compatible with VIVARES CLOUD SERVICE for energy monitoring
- Through-wiring possible with included cable clamp

AREAS OF APPLICATION

- Broad Tunable White CRI90 light color spectrum for high quality Human Centric Lighting applications
- Offices, conference rooms
- Reception areas, foyers, corridors, elevators

EQUIPMENT / ACCESSORIES

- External control gear included
- Cable clamp for through-wiring preinstalled

FURTHER PRODUCT DETAILS

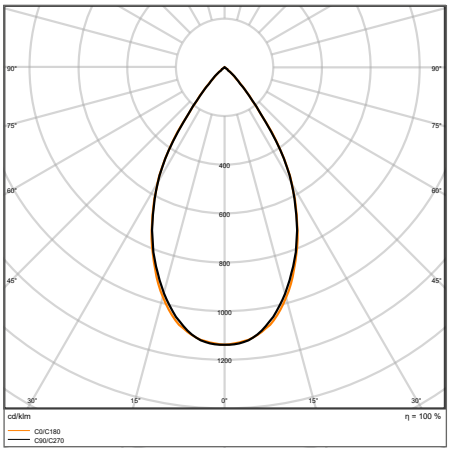

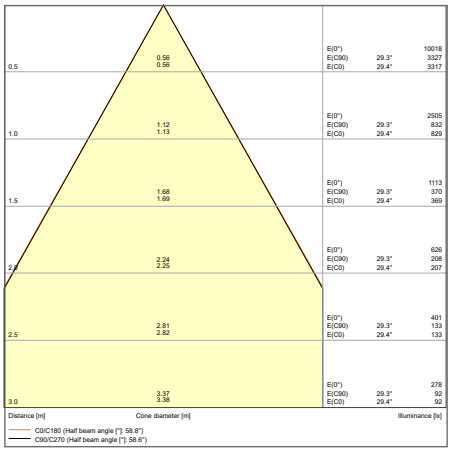

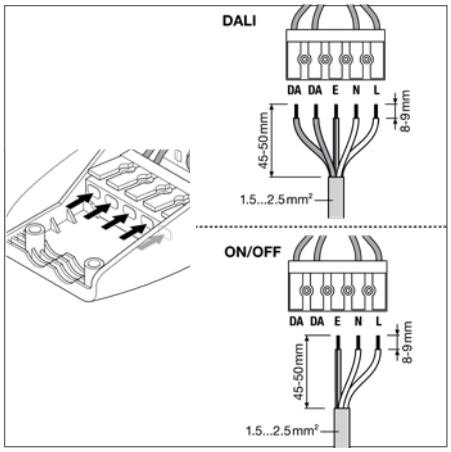

BIOLUX HCL DL DN150 S 21W TW DALI

The pictures shown in the catalog are for illustration purposes only. For information on size and color, please refer to the product table.

BIOLUX HCL DOWNLIGHT DALI

Downlight luminaires, Tunable White, 105 lm/W, tool-free installation, DALI-2 IoT technology

SUPERIOR CLASS

VIVA RES | IoT READY [1] | HCL | TW | EN EC | FLICKER VALUE <5% | UGR <19 | CRI >90 | LEDVANCE 5 year guarantee [2]

Product name	EAN (GTIN)	El.nr.	Replacement for	W	lm	lm/W	K	L70 [3]	°			L × W × H [mm] Ø × H [mm]
BIOLUX HCL DL DN150 S 21W TW DALI	4099854**140310**	**3202869**	2 × 26 W CFLP	21	2200	105	2700…6500	70000	60	DALI-2/IoT	160	175 × 99

[1] All luminaires support DALI-2 Energy Data (DALI part 252) and DALI-2 Diagnostic Data (DALI part 253).
[2] Refer to www.ledvance.com/guarantee for precise conditions
[3] t[h]: L70/B50 @ 25 °C (T_a)/t[h]: L80/B10 @ 25 °C (T_a)

BIOLUX HCL DOWNLIGHT ZIGBEE

Downlight luminaires, Tunable White, Zigbee

PRODUCT FEATURES

- Zigbee 3.0 certified Tunable White luminaires - LED strips for simple integration into partner systems
- Ready for connection to BIOLUX HCL and VIVARES ZIGBEE control unit
- Adjustable color temperature via Tunable White: 2 700…6 500 K
- Wireless communication between control unit and luminaries via Zigbee protocol
- Very high color rendering index Ra: > 90

PRODUCT BENEFITS

- Enables an individual lighting solution in combination with compatible Zigbee HCL lighting controls
- Biologically optimized lighting by adapting artificial light to natural daylight course
- 5 years BIOLUX HCL system guarantee when operated as part of a BIOLUX HCL system (BIOLUX HCL – VIVARES ZIGBEE control unit in combination with BIOLUX HCL luminaire(s) – BIOLUX HCL LED strips)
- Can support working with more concentration
- Good glare reduction (UGR ≤ 19)

AREAS OF APPLICATION

- Lighting solution for up to 40 BIOLUX HCL luminaires – BIOLUX HCL LED strips combined mit BIOLUX HCL control unit
- Open-plan office solution for up to 200 BIOLUX HCL luminaires combined with VIVARES ZIGBEE control unit
- Hotel and office rooms with little daylight

EQUIPMENT / ACCESSORIES

- LEDVANCE BIOLUX app required for commissioning of the BIOLUX HCL system only (available for Android and iOS)
- LEDVANCE VIVARES app for project planning and required for commissioning of the VIVARES ZIGBEE system only (available for Android and iOS)

The pictures shown in the catalog are for illustration purposes only. For information on size and color, please refer to the product table.

DOWNLIGHT UGR19

Downlights with low glare and low flicker

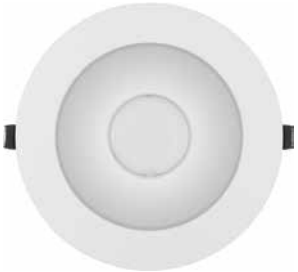

PRODUCT FEATURES

- Housing Material: aluminum with mirror-finished reflector
- Type of protection: IP54 (room side) / IP20 (back side)
- Through-wiring possible
- Luminaire available with on/off driver, DALI 2.0 IoT driver or Zigbee 3.0
- Connector box with push wire terminal for tool-free connection

PRODUCT BENEFITS

- Good glare reduction (UGR <19) and cut-off angle up to 30° for comfortable indoor lighting
- Easy and quick installation thanks to connector box with 5-pole toolless terminal
- Low-flicker light
- Suitable for use in dusty and humid environments thanks to high IP rating
- 5 years guarantee

AREAS OF APPLICATION

- Suitable for office applications, especially for computer screen workplaces
- Direct replacement for luminaires with compact fluorescent lamps
- Entrances / Hallways
- Bathrooms, kitchens and sheltered outdoor areas
- General illumination

EQUIPMENT / ACCESSORIES

- External control gear included

FURTHER PRODUCT DETAILS

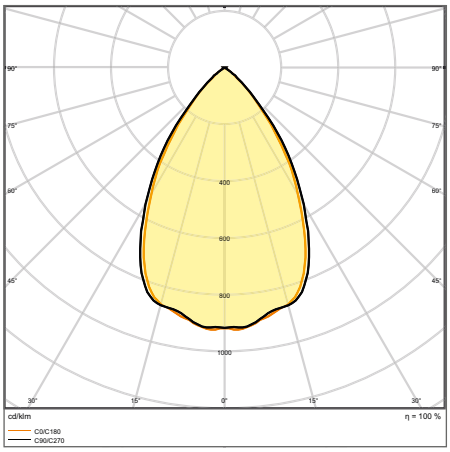

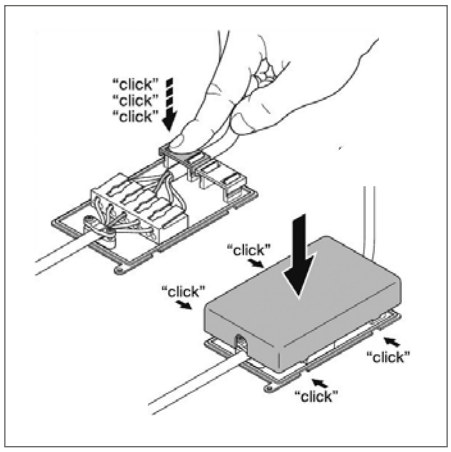

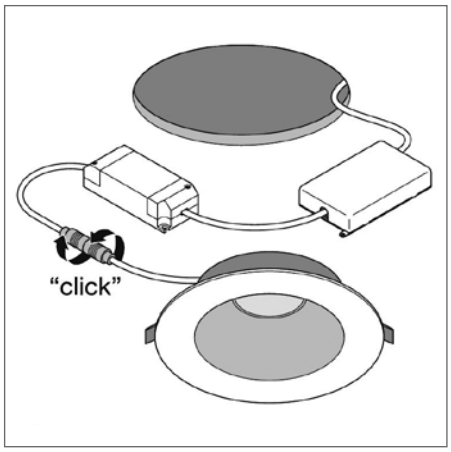

DL UGR19 PFM DN195 21 W 840 WT IP54

The pictures shown in the catalog are for illustration purposes only. For information on size and color, please refer to the product table.

DOWNLIGHT UGR19

Downlights with low glare and low flicker

PERFORMANCE CLASS · VIVA RES · IoT READY [1] · EN EC · TÜV SÜD · FLICKER VALUE <10 % · UGR <19 · CRI ≥80 · IP20 / IP54 · LEDVANCE 5 year guarantee [2]

Product name	EAN (GTIN)	El.nr.	Replacement for	W	lm	lm/W	K	L70 [3]	°			L × W × H [mm] Ø × H [mm]
DL UGR19 PFM DN155 14 W 830 WT IP54	4058075**459137**	**3203816**	1 × 26 W CFLi	14	1500	105	3000	70000	65	—	155	180 × 65
DL UGR19 PFM DN155 14 W 840 WT IP54	4058075**459151**	**3203817**	1 × 26 W CFLi	14	1600	115	4000	70000	65	—	155	180 × 65
DL UGR19 PFM DN195 21 W 830 WT IP54	4058075**459250**	**3203818**	2 × 26 W CFLi	21	2400	115	3000	70000	65	—	195	220 × 82
DL UGR19 PFM DN195 21 W 840 WT IP54	4058075**459274**	**3203819**	2 × 26 W CFLi	21	2520	120	4000	70000	65	—	195	220 × 82
DL UGR19 PFM DN155 14 W 830 WT IP54 DALI	4058075**459298**	**3203820**	1 × 26 W CFLi	14	1500	105	3000	70000	65	DALI-2/IoT	155	180 × 65
DL UGR19 PFM DN155 14 W 840 WT IP54 DALI	4058075**459311**	**3203821**	1 × 26 W CFLi	14	1600	115	4000	70000	65	DALI-2/IoT	155	180 × 65
DL UGR19 DN155 PFM 14 W-840 ZBVR WT	4058075**459892**	**3203824**	1 × 26 W CFLi	14	1600	115	4000	70000	65	Zigbee 3.0	155	180 × 65
DL UGR19 PFM DN195 21 W 830 WT IP54 DALI	4058075**459830**	**3203822**	2 × 26 W CFLi	21	2400	115	3000	70000	65	DALI-2/IoT	195	220 × 82
DL UGR19 PFM DN195 21 W 840 WT IP54 DALI	4058075**459854**	**3203823**	2 × 26 W CFLi	21	2520	120	4000	70000	65	DALI-2/IoT	195	220 × 82
DL UGR19 DN195 PFM 21 W-840 ZBVR WT	4058075**459397**	**3203825**	2 × 26 W CFLi	21	2520	120	4000	70000	65	Zigbee 3.0	195	220 × 82

[1] All DALI and Zigbee luminaires support DALI-2 Energy Data (DALI part 252) and DALI-2 Diagnostic Data (DALI part 253).
[2] Refer to www.ledvance.com/guarantee for precise conditions
[3] t[h]: L70 / B50 @ 25 °C (T_a) / t[h]: L80 / B10 @ 25 °C (T_a)

DOWNLIGHT COMFORT

Downlights with adjustable white light colors

PRODUCT FEATURES

- Material: aluminum (housing), polycarbonate (diffusor)
- Three light colors selectable via slide switch
- Type of protection: IP54 (room side)
- Through-wiring possible

PRODUCT BENEFITS

- Three light colors in one luminaire: warm white 3 000 K, daylight white 4 000 K, cold white 5 700 K
- Good glare reduction (UGR ≤ 22)
- Easy connection thanks to push terminal
- Suitable for use in dusty and humid environments thanks to high IP rating
- 5 years guarantee

AREAS OF APPLICATION

- Direct replacement for luminaires with compact fluorescent lamps
- General illumination
- Bathrooms, kitchens and sheltered outdoor areas
- Offices
- Corridors

FURTHER PRODUCT DETAILS

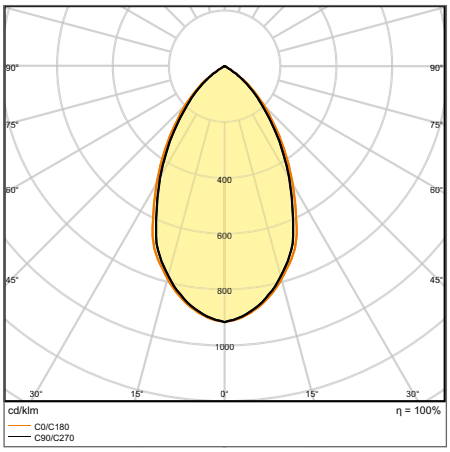

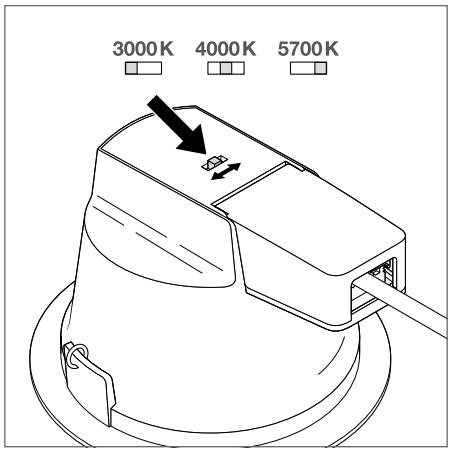

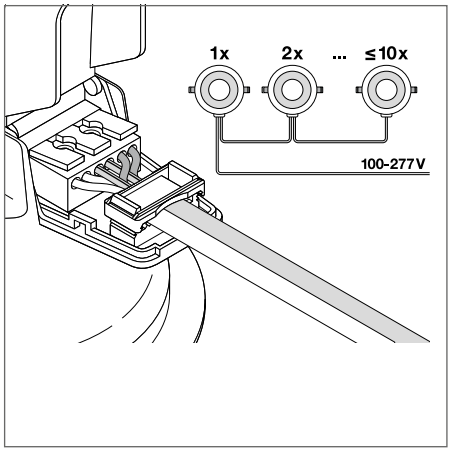

DL COMFORT DN 130 13 W 3CCT IP54 WT

The pictures shown in the catalog are for illustration purposes only. For information on size and color, please refer to the product table.

DOWNLIGHT COMFORT

Downlights with adjustable white light colors

PERFOR-MANCE CLASS

CRI >80

IP20 / IP54

LEDVANCE 5 year guarantee [1]

Product name	EAN (GTIN)	El.nr.	Replacement for	W	lm	lm/W	K	L70 [2]	°		L × W × H [mm] Ø × H [mm]
DL COMFORT DN 130 13 W 3CCT IP54 WT	4058075**104068**	**3201666**	1 × 18 W CFLi	13	1030…1210	85	3000…5700	50000	60	130	145 × 82
DL COMFORT DN 155 18 W 3CCT IP54 WT	4058075**104082**	**3201667**	2 × 18 W CFLi	18	1040…1620	85	3000…5700	50000	60	155	172 × 95
DL COMFORT DN 205 20 W 3CCT IP54 WT	4058075**104105**	**3201668**	2 × 26 W CFLi	20	1720…1930	90	3000…5700	50000	60	205	228 × 98

[1] Refer to www.ledvance.com/guarantee for precise conditions
[2] t[h]: L70 / B50 @ 25 °C (T_a) / t[h]: L80 / B10 @ 25 °C (T_a)

DOWNLIGHT SURFACE IP65

Surface-mounted downlights with IP65 grade

PRODUCT FEATURES

- Impact resistance: IK06
- Push wire terminal for tool-free connection
- Through-wiring possible
- Type of protection: IP65
- Luminous flux: up to 4 950 lm
- High luminous efficacy: up to 110 lm/W
- Lifetime (L70/B50): 100 000 h (at 25 °C)
- Ambient temperature in operation: –30…+40 °C

PRODUCT BENEFITS

- Suitable for use in dusty and damp locations thanks to high IP rating
- Suitable for use in public areas thanks to high IK rating
- 5 years guarantee
- Energy savings of up to 50 % (compared to luminaires that use fluorescent lamps)

AREAS OF APPLICATION

- Direct replacement for luminaires with fluorescent lamps
- Suitable for indoor and outdoor installations
- Corridors, stairways, entrance areas
- Passages, underpasses
- Public areas

FURTHER PRODUCT DETAILS

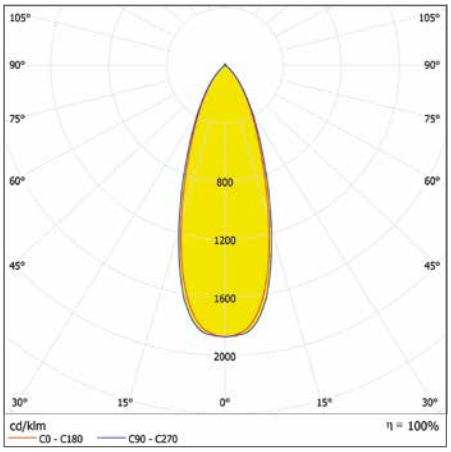

DL SURFACE DN 160 P 30W 830 36D IP65 WT

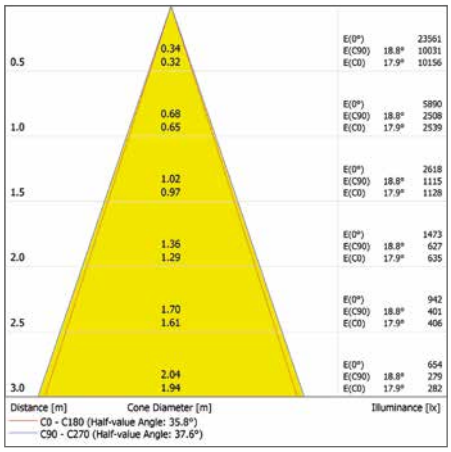

DL SURFACE DN 160 P 30W 830 36D IP65 WT

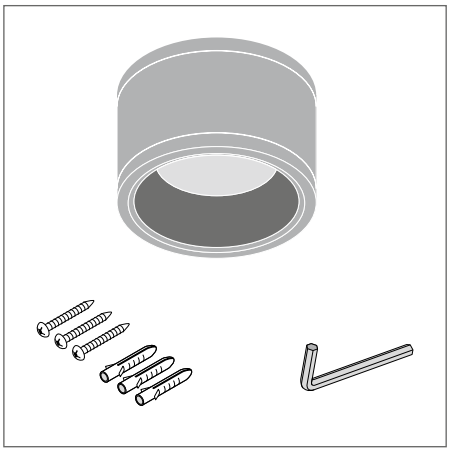

The pictures shown in the catalog are for illustration purposes only. For information on size and color, please refer to the product table.

DOWNLIGHT SURFACE IP65

Surface-mounted downlights with IP65 grade

PERFOR-MANCE CLASS

FLICKER VALUE <5% | UGR <19 | CRI >80 | IP65 / IP65 | LEDVANCE 5 year guarantee [2]

Product name	EAN (GTIN)	El.nr.	Replacement for	W	lm	lm/W	K	L70 [2]	°	L × W × H [mm] Ø × H [mm]
DL SURFACE DN 90 P 15W 830 36D IP65 WT	4058075**768857**	—	1 × 26W CFLi	15	1575	105	3000	100000	36	90 × 107
DL SURFACE DN 90 P 15W 840 36D IP65 WT	4058075**768871**	—	1 × 26W CFLi	15	1650	110	4000	100000	36	90 × 107
DL SURFACE DN 90 P 15W 830 36D IP65 BK	4058075**768895**	—	1 × 26W CFLi	15	1575	105	3000	100000	36	90 × 107
DL SURFACE DN 90 P 15W 840 36D IP65 BK	4058075**768918**	—	1 × 26W CFLi	15	1650	110	4000	100000	36	90 × 107
DL SURFACE DN 90 P 15W 830 60D IP65 WT	4058075**768963**	—	1 × 26W CFLi	15	1575	105	3000	100000	60	90 × 107
DL SURFACE DN 90 P 15W 840 60D IP65 WT	4058075**768987**	—	1 × 26W CFLi	15	1650	110	4000	100000	60	90 × 107
DL SURFACE DN 90 P 15W 830 60D IP65 BK	4058075**769007**	—	1 × 26W CFLi	15	1575	105	3000	100000	60	90 × 107
DL SURFACE DN 90 P 15W 840 60D IP65 BK	4058075**769021**	—	1 × 26W CFLi	15	1650	110	4000	100000	60	90 × 107
DL SURFACE DN 160 P 30W 830 36D IP65 WT	4058075**769045**	—	2 × 26W CFLi	30	3150	105	3000	100000	36	160 × 110
DL SURFACE DN 160 P 30W 840 36D IP65 WT	4058075**769076**	—	2 × 26W CFLi	30	3300	110	4000	100000	36	160 × 110
DL SURFACE DN 160 P 30W 830 36D IP65 BK	4058075**769090**	—	2 × 26W CFLi	30	3150	105	3000	100000	36	160 × 110
DL SURFACE DN 160 P 30W 840 36D IP65 BK	4058075**769113**	—	2 × 26W CFLi	30	3300	110	4000	100000	36	160 × 110
DL SURFACE DN 160 P 30W 830 60D IP65 WT	4058075**769137**	—	2 × 26W CFLi	30	3150	105	3000	100000	60	160 × 110
DL SURFACE DN 160 P 30W 840 60D IP65 WT	4058075**769151**	—	2 × 26W CFLi	30	3300	110	4000	100000	60	160 × 110
DL SURFACE DN 160 P 30W 830 60D IP65 BK	4058075**769175**	—	2 × 26W CFLi	30	3150	105	3000	100000	60	160 × 110
DL SURFACE DN 160 P 30W 840 60D IP65 BK	4058075**769199**	—	2 × 26W CFLi	30	3300	110	4000	100000	60	160 × 110
DL SURFACE DN 250 P 45W 830 36D IP65 WT	4058075**769212**	—	2 × 42W CFLi	45	4725	105	3000	100000	36	250 × 125
DL SURFACE DN 250 P 45W 840 36D IP65 WT	4058075**769236**	—	2 × 42W CFLi	45	4950	110	4000	100000	36	250 × 125
DL SURFACE DN 250 P 45W 830 36D IP65 BK	4058075**769250**	—	2 × 42W CFLi	45	4725	105	3000	100000	36	250 × 125
DL SURFACE DN 250 P 45W 840 36D IP65 BK	4058075**769274**	—	2 × 42W CFLi	45	4950	110	4000	100000	36	250 × 125
DL SURFACE DN 250 P 45W 830 60D IP65 WT	4058075**769298**	—	2 × 42W CFLi	45	4725	105	3000	100000	60	250 × 125
DL SURFACE DN 250 P 45W 840 60D IP65 WT	4058075**769335**	—	2 × 42W CFLi	45	4950	110	4000	100000	60	250 × 125
DL SURFACE DN 250 P 45W 830 60D IP65 BK	4058075**769359**	—	2 × 42W CFLi	45	4725	105	3000	100000	60	250 × 125
DL SURFACE DN 250 P 45W 840 60D IP65 BK	4058075**769397**	—	2 × 42W CFLi	45	4950	110	4000	100000	60	250 × 125

[1] Refer to www.ledvance.com/guarantee for precise conditions
[2] t[h]: L70 / B50 @ 25 °C (Ta) / t[h]: L80 / B10 @ 25 °C (Ta)

DOWNLIGHT ALU

Downlight luminaires with aluminum housing

PRODUCT FEATURES

- Housing material: aluminum
- Diffuser made of opal polycarbonate
- Type of protection, front side: IP44
- Luminaire available as switchable and DALI versions

PRODUCT BENEFITS

- Suitable for use in dusty and humid environments thanks to high IP rating
- Wide range of applications thanks to a large variety of versions
- Energy savings of up to 60 % compared to luminaires that use CFL
- Up to 5 years guarantee

AREAS OF APPLICATION

- Direct replacement for luminaires with compact fluorescent lamps
- General illumination
- Public areas
- Stairways
- Corridors

FURTHER PRODUCT DETAILS

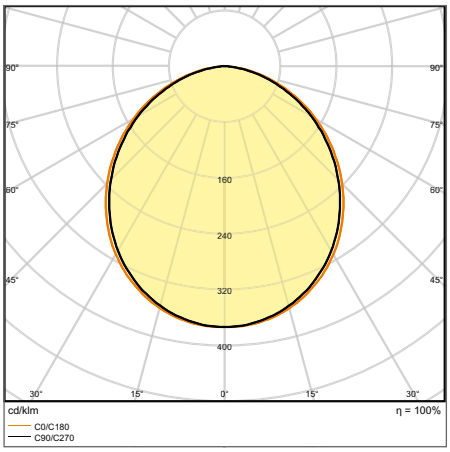

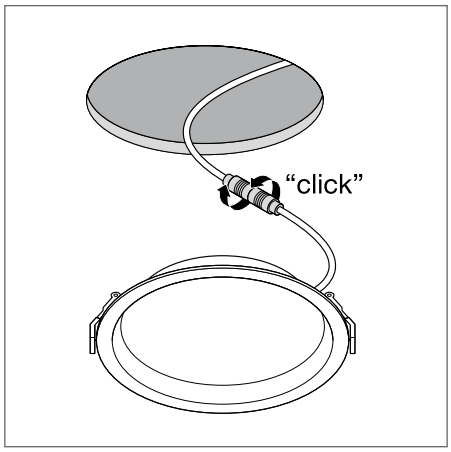

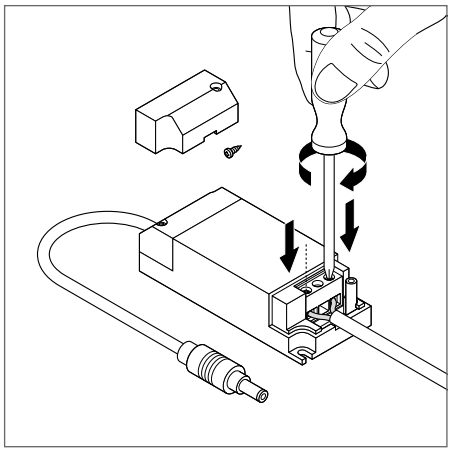

DL ALU DALI DN 200 35 W 6500 K
IP44/IP20 WT

The pictures shown in the catalog are for illustration purposes only. For information on size and color, please refer to the product table.

DOWNLIGHT ALU

Downlight luminaires with aluminum housing

VALUE CLASS

Product name	EAN (GTIN)	El.nr.	Replacement for	W	lm	lm/W	K	L70 [3]	°			L × W × H [mm] Ø × H [mm]
DL ALU DN 150 14 W 3000 K IP44/IP20 WT	4058075**091436**	**3201669**	1 × 26 W CFLi	14	1190	85	3000	50000	100	—	150	160 × 52
DL ALU DN 150 14 W 4000 K IP44/IP20 WT	4058075**091450**	**3201670**	1 × 26 W CFLi	14	1260	90	4000	50000	100	—	150	160 × 52
DL ALU DN 150 14 W 6500 K IP44/IP20 WT	4058075**091474**	—	1 × 26 W CFLi	14	1330	95	6500	50000	100	—	150	160 × 52
DL ALU DN 200 25 W 3000 K IP44/IP20 WT	4058075**091498**	**3201671**	2 × 26 W CFLi	25	2250	90	3000	50000	100	—	200	215 × 61
DL ALU DN 200 25 W 4000 K IP44/IP20 WT	4058075**091511**	**3201672**	2 × 26 W CFLi	25	2370	95	4000	50000	100	—	200	215 × 61
DL ALU DN 200 25 W 6500 K IP44/IP20 WT	4058075**091535**	—	2 × 26 W CFLi	25	2370	95	6500	50000	100	—	200	215 × 61
DL ALU DN 200 35 W 3000 K IP44/IP20 WT	4058075**091559**	**3201673**	2 × 42 W CFLi	35	2975	85	3000	50000	100	—	200	215 × 61
DL ALU DN 200 35 W 4000 K IP44/IP20 WT	4058075**091573**	**3201674**	2 × 42 W CFLi	35	3150	90	4000	50000	100	—	200	215 × 61
DL ALU DN 200 35 W 6500 K IP44/IP20 WT	4058075**091597**	—	2 × 42 W CFLi	35	3150	90	6500	50000	100	—	200	215 × 61
DL ALU DALI DN 150 14 W 3000 K IP44/IP20 WT	4058075**202610**	**3242440**	1 × 26 W CFLi	14	1190	85	3000	50000	100	DALI-2	150	160 × 52
DL ALU DALI DN 150 14 W 4000 K IP44/IP20 WT	4058075**202634**	**3242441**	1 × 26 W CFLi	14	1260	90	4000	50000	100	DALI-2	150	160 × 52
DL ALU DALI DN 150 14 W 6500 K IP44/IP20 WT	4058075**202658**	—	1 × 26 W CFLi	14	1330	95	6500	50000	100	DALI-2	150	160 × 52
DL ALU DALI DN 200 25 W 3000 K IP44/IP20 WT	4058075**091610**	**3201675**	2 × 26 W CFLi	25	2250	90	3000	50000	100	DALI-2	200	215 × 61
DL ALU DALI DN 200 25 W 4000 K IP44/IP20 WT	4058075**091634**	**3201676**	2 × 26 W CFLi	25	2370	95	4000	50000	100	DALI-2	200	215 × 61
DL ALU DALI DN 200 25 W 6500 K IP44/IP20 WT	4058075**091658**	—	2 × 26 W CFLi	25	2370	95	6500	50000	100	DALI-2	200	215 × 61
DL ALU DALI DN 200 35 W 3000 K IP44/IP20 WT	4058075**091672**	**3201677**	2 × 42 W CFLi	35	2975	85	3000	50000	100	DALI-2	200	215 × 61
DL ALU DALI DN 200 35 W 4000 K IP44/IP20 WT	4058075**091696**	**3201678**	2 × 42 W CFLi	35	3150	90	4000	50000	100	DALI-2	200	215 × 61
DL ALU DALI DN 200 35 W 6500 K IP44/IP20 WT	4058075**091719**	—	2 × 42 W CFLi	35	3150	90	6500	50000	100	DALI-2	200	215 × 61

[1] The ENEC and TÜV certifications apply exclusively to the switchable versions of the luminaire family, DALI versions are excepted.
[2] Refer to www.ledvance.com/guarantee for precise conditions
[3] t[h]: L70 / B50 @ 25 °C (Ta) / t[h]: L80 / B10 @ 25 °C (Ta)

DOWNLIGHT SLIM ALU

Flat downlights with external driver and aluminum housing

PRODUCT FEATURES

- Solid aluminum housing in white
- Diffuser made of opal PMMA
- Small visible bezel

PRODUCT BENEFITS

- Extremely small mounting depth due to very low-profile housing
- Energy savings of up to 60 % compared to luminaires that use CFL
- External driver for easy replacement
- 5 years guarantee

AREAS OF APPLICATION

- Direct replacement for luminaires with compact fluorescent lamps
- General illumination
- Public areas
- Stairways
- Corridors

FURTHER PRODUCT DETAILS

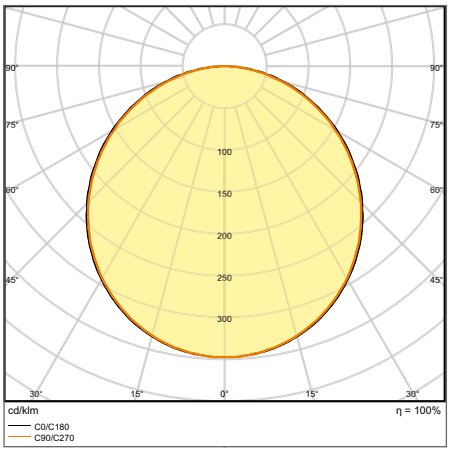

DL SLIM ALU DN 205 22 W 4000 K WT

The pictures shown in the catalog are for illustration purposes only. For information on size and color, please refer to the product table.

DOWNLIGHT SLIM ALU

Flat downlights with external driver and aluminum housing

VALUE CLASS

CRI >80 | IP 20 | LEDVANCE 5 year guarantee [1]

Product name	EAN (GTIN)	El.nr.	Replacement for	W	lm	lm/W	K	L70 [2]	°		L × W × H [mm] Ø × H [mm]
DL SLIM ALU DN 180 17 W 3000 K WT	4058075**063921**	—	1 × 26 W CFLi	17	1350	80	3000	50000	120	180	192 × 23
DL SLIM ALU DN 180 17 W 4000 K WT	4058075**063945**	—	1 × 26 W CFLi	17	1400	80	4000	50000	120	180	192 × 23
DL SLIM ALU DN 205 22 W 3000 K WT	4058075**064003**	—	2 × 18 W CFLi	22	1850	85	3000	50000	120	205	225 × 23
DL SLIM ALU DN 205 22 W 4000 K WT	4058075**064027**	—	2 × 18 W CFLi	22	1920	90	4000	50000	120	205	225 × 23

[1] Refer to www.ledvance.com/guarantee for precise conditions
[2] t[h]: L70 / B50 @ 25 °C (T_a) / t[h]: L80 / B10 @ 25 °C (T_a)

SPOTLIGHTS

IMPRESSIVE ALL ROUND: OUR SPOTLIGHTS

SPOT VARIO

PERFOR-MANCE CLASS

Page 42

VERSATILE SWIVEL SPOTLIGHT FOR THE RETAIL AREA
- Ideal for accent lighting thanks to highly flexible tilt and swivel capability
- Easy replacement of the external driver thanks to plug with bayonet connection
- Low-flicker light < 10 %

SPOT MULTI

PERFOR-MANCE CLASS

Page 44

POWERFUL MULTI-SPOTLIGHT WITH GIMBAL
- Low-flicker light < 10 %
- Flexible application thanks to excellent anti-glare properties UGR < 16
- Light-proof housing

SPOT COMBO

VALUE CLASS

Page 46

SPOT COMBO FIX
SPOT COMBO ADJUST

COVERABLE SPOT WITH CCT AND POWER SELECT
- Color temperature switch (CCT): 2 700, 3 000 and 4 000 K via switch on back of the spot
- Power Select option available to select between 2 lumen brightness packages
- IP65 protection

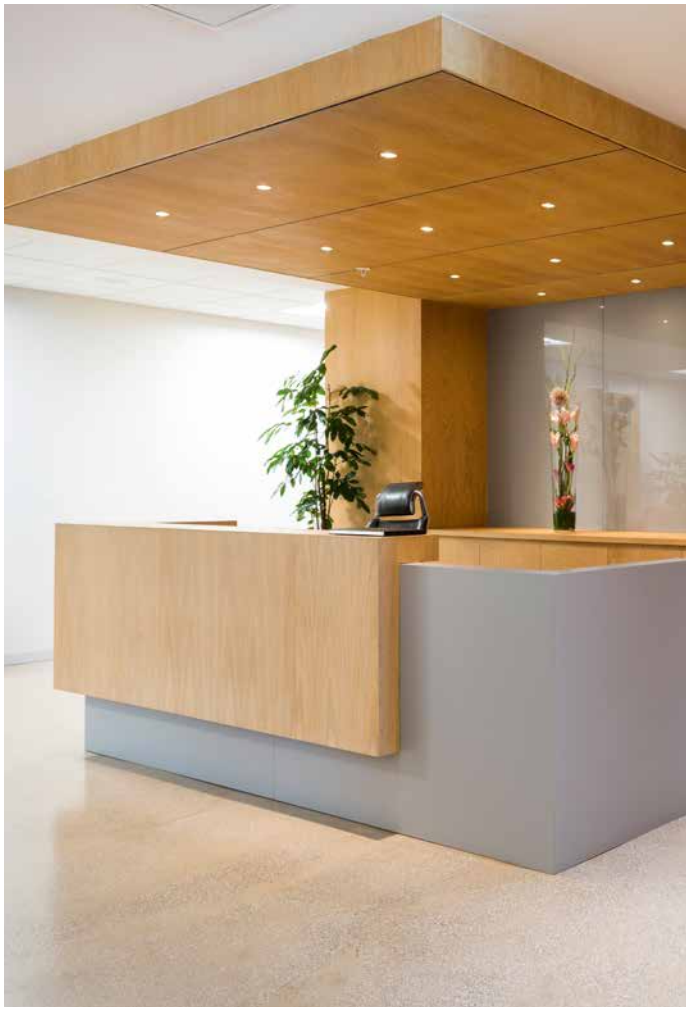

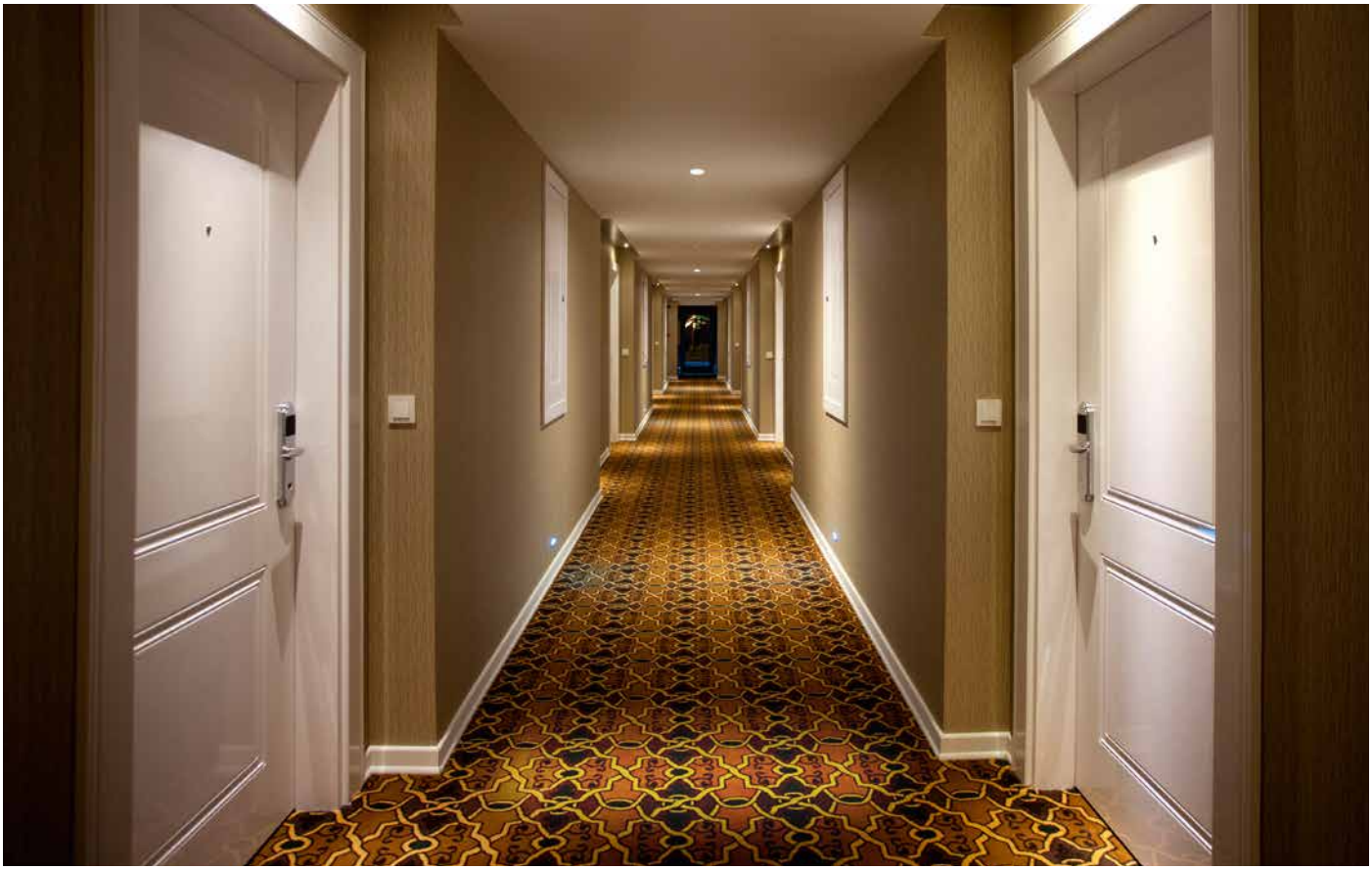

SPOT FIX OR ADJUST

PERFOR-MANCE CLASS

Page 50

SPOT FIX
SPOT ADJUST

VERSATILE REPLACEMENT FOR HALOGEN SPOTLIGHTS

- Energy savings of up to 90 % compared to halogen lamp spotlights
- Advanced flexibility due to external DIMABLE driver (included), easy and quick installation, completely toolless, with twist and lock connector
- Power Select: Brightness adjustment via dip switches on the driver

SPOT DARKLIGHT

PERFOR-MANCE CLASS

Page 54

IMPROVED SPOT WITH ANTI-GLARE LIGHT-COMFORT

- Darklight: Special construction for enhanced low-glare light-comfort
- Power Select: Brightness adjustment via dip switches on the driver
- Advanced flexibility due to external DIMABLE driver (included), easy and quick installation, completely toolless, with twist and lock connector

SPOT FIRE RATED

PERFOR-MANCE CLASS

Page 56

OPTIMAL FOR CERTAIN FIRE-RESITANT CEILINGS

- Fire-rated: Designed and tested to meet fire rating standards (in certain fire rated ceilings)
- Advanced flexibility due to external DIMABLE driver (included), easy and quick installation, completely toolless, with twist and lock connector
- Power Select: Brightness adjustment via dip switches on the driver

SPOT AIR FIX OR ADJUST

PERFOR-MANCE CLASS

Page 58

SPOT AIR FIX
SPOT AIR ADJUST

SPOTLIGHTS FOR LOW-ENERGY AND NARROW CEILINGS

- Airtight construction for reduced air-leakage and limited energy loss
- Coverable by many types of thermal insulation material
- Low profile enables installation into shallow ceiling voids
- Advanced flexibility due to external DIMABLE driver (included), easy and quick installation, completely toolless, with twist and lock connector

NEW HIGHLIGHTS: VERSATILE SPOTLIGHT FAMILY, FROM STANDARD APPLICATION TO MORE CHALLENGING CEILING TYPE

GREAT QUALITY

- Full metal aluminum housing
- LEDVANCE SCALE Design
- In 3 different colors available

WT WHITE | BK BLACK | SI SILVER

GREAT LIGHT

- Facetted PMMA lens with perfectly shaped 38° beam angle
- Latest LED COB generation, CRI 90 and SDCM 3
- In 3 different color temperatures available

2700K CCT | 3000K CCT | 4000K CCT

VERSATILE

- FIX or ADJUSTABLE ±25°
- Convenient mounting (standard-cut of 68 mm, toolless, through-wiring, soft silicon pad, strong clips, refurbishment rings)
- Specialists for special ceiling-types (low profile, low built-in height, high IP)
- Water resistant versions with IP44 or IP65 protection class from roomside

Ø68 | 3-30 | >60

SIMPLE, CONVENIENT, VERSATILE
SPOT DRIVER PS 4/6/8 W DIM

A perfect team: Each LEDVANCE SPOT comes with an LED driver. It is perfectly matched to the luminaire's power values and boasts high functionality. Thanks to the piano key terminals, it can be connected without any tools. It can even be wired through to the next luminaire. POWERSELECT PS: A dip switch can be used to set the SPOT's maximum brightness in three levels. The driver is also steplessly controllable on standard LED universal or leading-edge/trailing-edge phase dimmers.

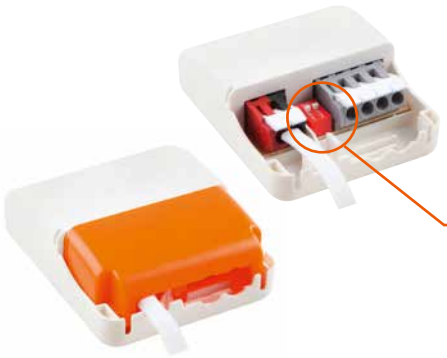

ADVANCED PROPERTIES FOR SPECIAL APPLICATIONS: THE EXPERTS AMONG LEDVANCE SPOTLIGHTS CAN DO MORE

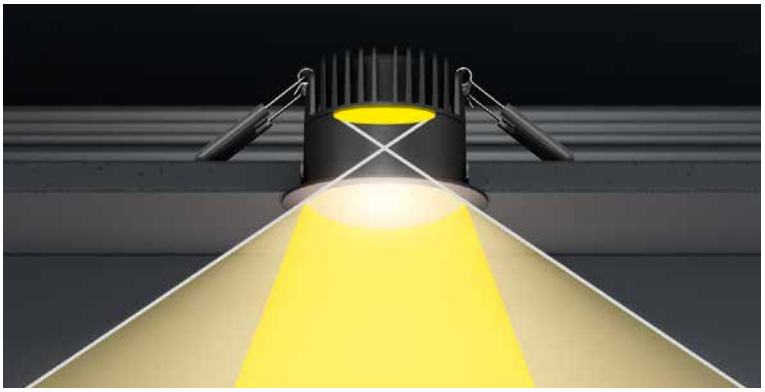

SPOT DARKLIGHT
THE LIGHTING COMFORT SPECIALIST

The first choice for hotels and homes. The light output of the SPOT DARKLIGHT, which is lowered deep into the housing, provides a wide upper shielding angle and therefore excellent glare control – especially in the black housing version with a warm white light color. Together with the luminaire's easy dimmability, this creates a high level of lighting comfort.

SPOT FIRE RATED
THE FIRE PROTECTION SPECIALIST

To meet stringent fire protection requirements, ceilings in certain building types and parts must have a special fire-retardant structure.

The SPOT FIRE RATED from LEDVANCE ensures that the functionality of the fire ceiling is maintained after installation for certain ceiling systems and fires*.

SPOT AIR FIX & AIR ADJUST
THE ENERGY-SAVING SPECIALISTS

The German Buildings Energy Act (GEG) prescribes an airtight building envelope and uniformly thick thermal insulation throughout to prevent energy losses – especially for top floors. The LEDVANCE SPOT AIR uses a lamellar seal to create an airtight connection to the ceiling. It can also be covered directly with suitable rollable or blow-in insulating materials. If there is a vapor barrier, the SPOT HOLDER is used as a spacer.

COMPATIBLE SPOT ACCESSORIES

Whether it's the SPOT RING to reduce an existing ceiling cut-out, the SPOT HOLDER to increase the distance between the spotlight and the insulation material or the CONNECTOR BOX for tool-free connection – the LEDVANCE SPOT accessories meet your individual needs.
More from **page 62** or at **www.ledvance.com/spots-gen2/accessories**

* Refer to the latest installation and safety instructions

SPOT VARIO

Recessed mounted spotlight, swivelable

PRODUCT FEATURES

- Housing material: aluminum
- Rotation angle: 0°...350°, tilt angle: 0°...35°
- Beam angle: 24°
- Large faceted reflector for high light output

PRODUCT BENEFITS

- Ideal for accent lighting thanks to highly flexible tilt and swivel capability
- Easy replacement of external driver thanks to plug with bayonet lock
- Low-flicker light
- Die-cast aluminum housing for improved heat dissipation
- 5 years guarantee

AREAS OF APPLICATION

- Accent- and general lighting for all kind of salesrooms
- Retail
- Supermarkets
- Shops, boutiques
- Hotel rooms

EQUIPMENT / ACCESSORIES

- Driver included

FURTHER PRODUCT DETAILS

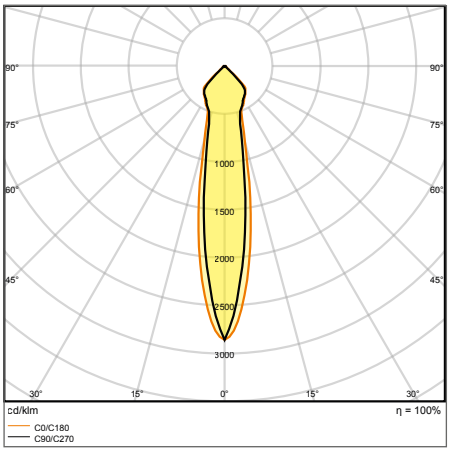

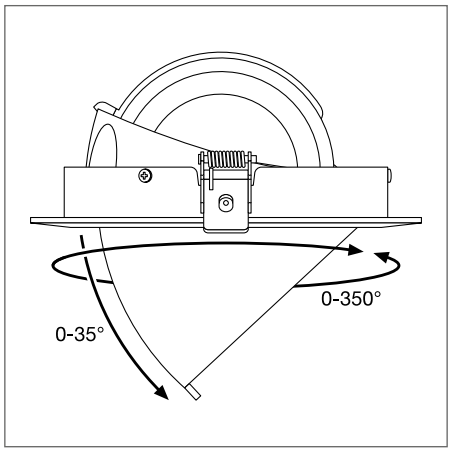

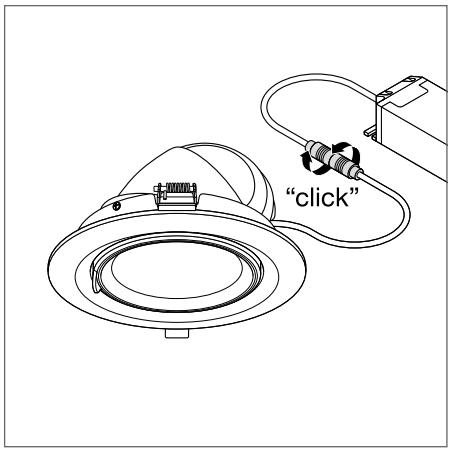

SPOT VARIO DN 170 35 W 3000 K
24DEG WT

The pictures shown in the catalog are for illustration purposes only. For information on size and color, please refer to the product table.

SPOT VARIO

Recessed mounted spotlight, swivelable

PERFOR-MANCE CLASS

FLICKER VALUE <10 %

CRI >80

IP 20

LEDVANCE 5 year guarantee [1]

Product name	EAN (GTIN)	El.nr.	Replacement for	W	lm	lm/W	K	L70 [2]	°		L × W × H [mm] Ø × H [mm]
SPOT VARIO DN 170 35 W 3000 K 24DEG WT	4058075**104020**	**3201939**	1 × 70 W HID	35	3350	95	3000	50000	24	170	180 × 129
SPOT VARIO DN 170 35 W 4000 K 24DEG WT	4058075**104044**	**3201940**	1 × 70 W HID	35	3550	100	4000	50000	24	170	180 × 129

[1] Refer to www.ledvance.com/guarantee for precise conditions
[2] t[h]: L70 / B50 @ 25 °C (T_a) / t[h]: L80 / B10 @ 25 °C (T_a)

SPOT MULTI

Recessed mounted spotlight, swivelable

1

2

PRODUCT FEATURES

- Housing material: aluminum
- Housing, black; frame, white
- One driver per luminaire head (1-, 2-lamp)
- Gimbal adjustment angle: +/- 25°

PRODUCT BENEFITS

- Low-flicker light
- Flexible application thanks to excellent anti-glare properties UGR < 16
- Light-proof housing
- Easy replacement of external driver thanks to plug with bayonet lock

AREAS OF APPLICATION

- Accent- and general lighting for all kind of salesrooms
- Fashion shops, accessories shops
- Shops, boutiques
- Hotel rooms
- Cafés

EQUIPMENT / ACCESSORIES

- Driver included

FURTHER PRODUCT DETAILS

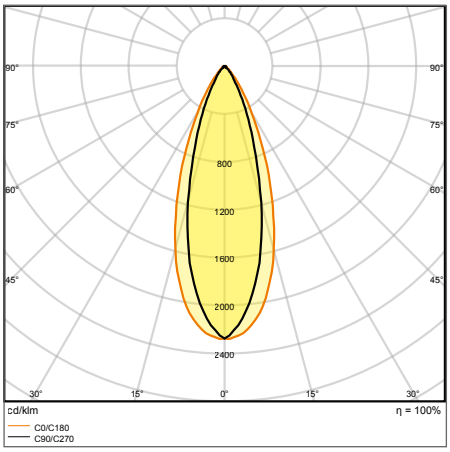

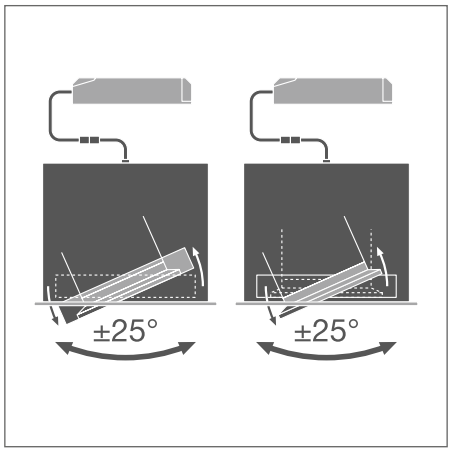

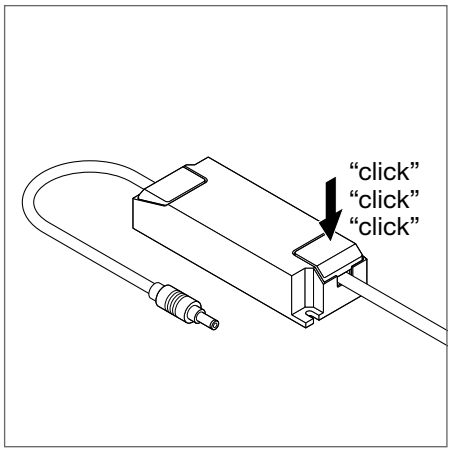

SPOT MULTI 1 x 30W 3000K FL WT/BK

The pictures shown in the catalog are for illustration purposes only. For information on size and color, please refer to the product table.

SPOT MULTI

Recessed mounted spotlight, swivelable

PERFOR-MANCE CLASS

FLICKER VALUE <10 %

CRI >80

IP 20

LEDVANCE 5 year guarantee [1]

Product name	EAN (GTIN)	El.nr.	Replacement for	W	lm	lm/W	K	L70 [2]	°		L × W × H [mm] Ø × H [mm]	No.
SPOT MULTI 1 x 30W 3000K FL WT/BK	4058075**113923**	**3201941**	1 × 35 W HID	30	2700	90	3000	50000	38		164 × 160	173 × 173 × 135	1
SPOT MULTI 1 x 30W 4000K FL WT/BK	4058075**113947**	**3201942**	1 × 35 W HID	30	2700	90	4000	50000	38		164 × 160	173 × 173 × 135	1
SPOT MULTI 2 x 30W 3000K FL WT/BK	4058075**113961**	**3201943**	2 × 35 W HID	2 × 30	2 × 2700	90	3000	50000	38		320 × 160	330 × 173 × 135	2
SPOT MULTI 2 x 30W 4000K FL WT/BK	4058075**113985**	**3201944**	2 × 35 W HID	2 × 30	2 × 2700	90	4000	50000	38		320 × 160	330 × 173 × 135	2

[1] Refer to www.ledvance.com/guarantee for precise conditions
[2] t[h]: L70 / B50 @ 25 °C (T_a) / t[h]: L80 / B10 @ 25 °C (T_a)

SPOT COMBO

Coverable spot with CCT and power select (CPS) in fix and adjustable version

1

2

2

PRODUCT FEATURES

- Color temperature switch (CCT): 2 700 K, 3 000 K, 4 000 K
- Power select option available to select between 2 lumen packages
- Type of protection: IP65
- Housing material: polycarbonate (PC)

PRODUCT BENEFITS

- White round ring included
- Color temperature adjustment via switch on the back of the spot
- Power select: Brightness adjustment via a switch on the driver
- Coverable with most thermal isolation material according to IEC 60598-2-2
- 5 years guarantee

AREAS OF APPLICATION

- Direct replacement for recessed spotlights with halogen lamps
- General illumination
- Hotel rooms and corridors
- Bars, restaurants
- Residential interiors

EQUIPMENT / ACCESSORIES

- Already equipped with white round ring
- Additional cover rings separately available in round and square shape and in different colors

FURTHER PRODUCT DETAILS

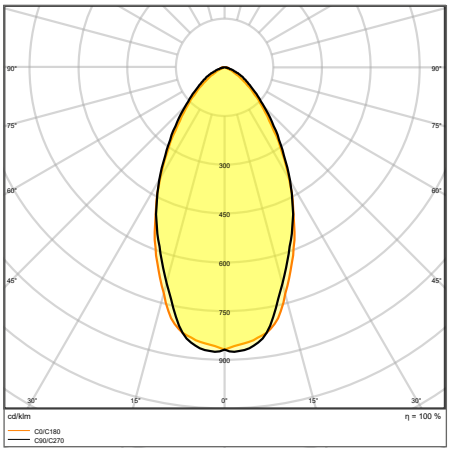

SP CBO FIX V 5.5W CPS 60DEG IP65 WT

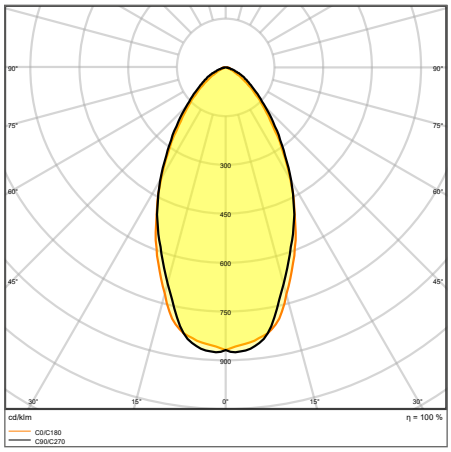

SP CBO ADJ V 5.5W CPS 60DEG IP65 WT

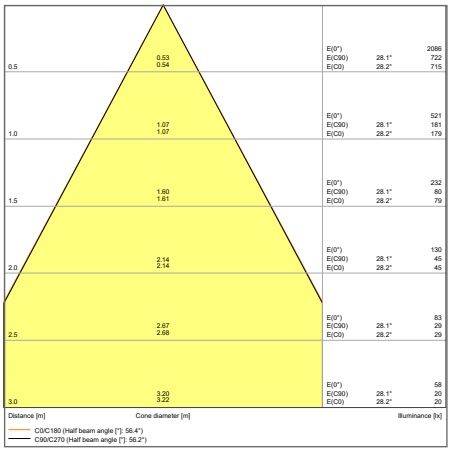

SP CBO ADJ V 5.5W CPS 60DEG IP65 WT

The pictures shown in the catalog are for illustration purposes only. For information on size and color, please refer to the product table.

FURTHER PRODUCT DETAILS

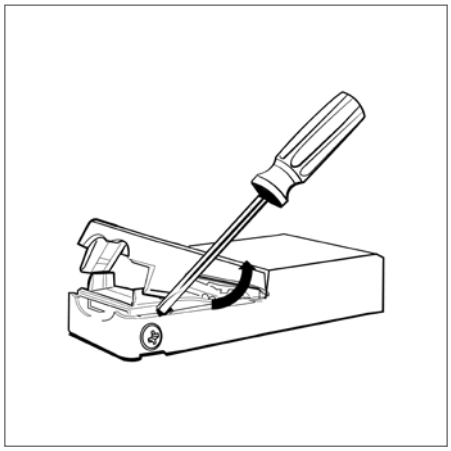

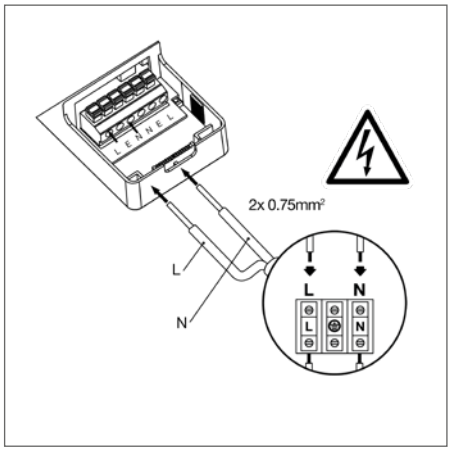

SPOT COMBO FIX

Coverable spot with CCT and power select (CPS) in fix version

VALUE CLASS

Product name	EAN (GTIN)	El.nr.	Replacement for	W	lm	lm/W	K	L70 [2]	°		L × W × H [mm] Ø × H [mm]	No.
SP CBO FIX V 5.5W CPS 60DEG IP65 WT	4099854**092701**	**3252693**	40 W INCAND.	5.5	600	109	2700/3000/4000	50000	60	68	81.5 × 48	1

SPOT COMBO ADJUST

Coverable spot with CCT and power select (CPS) in adjustable version

VALUE CLASS

Product name	EAN (GTIN)	El.nr.	Replacement for	W	lm	lm/W	K	L70 [2]	°		L × W × H [mm] Ø × H [mm]	No.
SP CBO ADJ V 5.5W CPS 60DEG IP65 WT	4099854**092725**	**3252694**	40 W INCAND.	5.5	600	109	2700/3000/4000	50000	60	68	81.5 × 48	2

[1] Refer to www.ledvance.com/guarantee for precise conditions
[2] t[h]: L70/B50 @ 25 °C (T_a)/t[h]: L80/B10 @ 25 °C (T_a)

SPOT COMBO ACCESSORIES

Replaceable ring for SPOT COMBO ADJUST and FIX

1

2

3

4

5

6

7

8

9

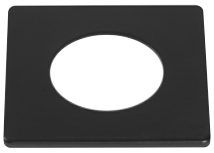
10

PRODUCT FEATURES

- Available in round and square shape
- Available in three different colors: white, black and brushed nickel
- Material: aluminum

PRODUCT BENEFITS

- Elegant design

SPOT COMBO RING ADJUST

Replaceable ring for SPOT COMBO ADJUST in round and square shape

LEDVANCE 5 year guarantee [1]

Product name	EAN (GTIN)	El.nr.	L × W × H [mm] Ø × H [mm]	MATERIAL	COLOR	No.
SP CBO RING ADJ ROUND BK	4099854**097911**	—	81.5 × 3.7	Aluminum	Black	1
SP CBO RING ADJ ROUND BN	4099854**097935**	—	81.5 × 3.7	Aluminum	Brushed nickel	2
SP CBO RING ADJ SQUARE BN	4099854**097959**	—	81.5 × 81.5 × 3.7	Aluminum	Brushed nickel	3
SP CBO RING ADJ SQUARE WT	4099854**097973**	—	81.5 × 81.5 × 3.7	Aluminum	White	4
SP CBO RING ADJ SQUARE BK	4099854**097997**	—	81.5 × 81.5 × 3.7	Aluminum	Black	5

[1] Refer to www.ledvance.com/guarantee for precise conditions
The pictures shown in the catalog are for illustration purposes only. For information on size and color, please refer to the product table.

SPOT COMBO RING FIX

Replaceable ring for SPOT COMBO FIX in round and square shape

LEDVANCE 5 year guarantee [1]

Product name	EAN (GTIN)	El.nr.	L × W × H [mm] Ø × H [mm]	MATERIAL	COLOR	No.
SP CBO RING FIX ROUND BK	4099854**098406**	—	81.5 × 3.7	Aluminum	Black	6
SP CBO RING FIX ROUND BN	4099854**098437**	—	81.5 × 3.7	Aluminum	Brushed nickel	7
SP CBO RING FIX SQUARE BN	4099854**099274**	—	81.5 × 81.5 × 3.7	Aluminum	Brushed nickel	8
SP CBO RING FIX SQUARE WT	4099854**099304**	—	81.5 × 81.5 × 3.7	Aluminum	White	9
SP CBO RING FIX SQUARE BK	4099854**099335**	—	81.5 × 81.5 × 3.7	Aluminum	Black	10

[1] Refer to www.ledvance.com/guarantee for precise conditions

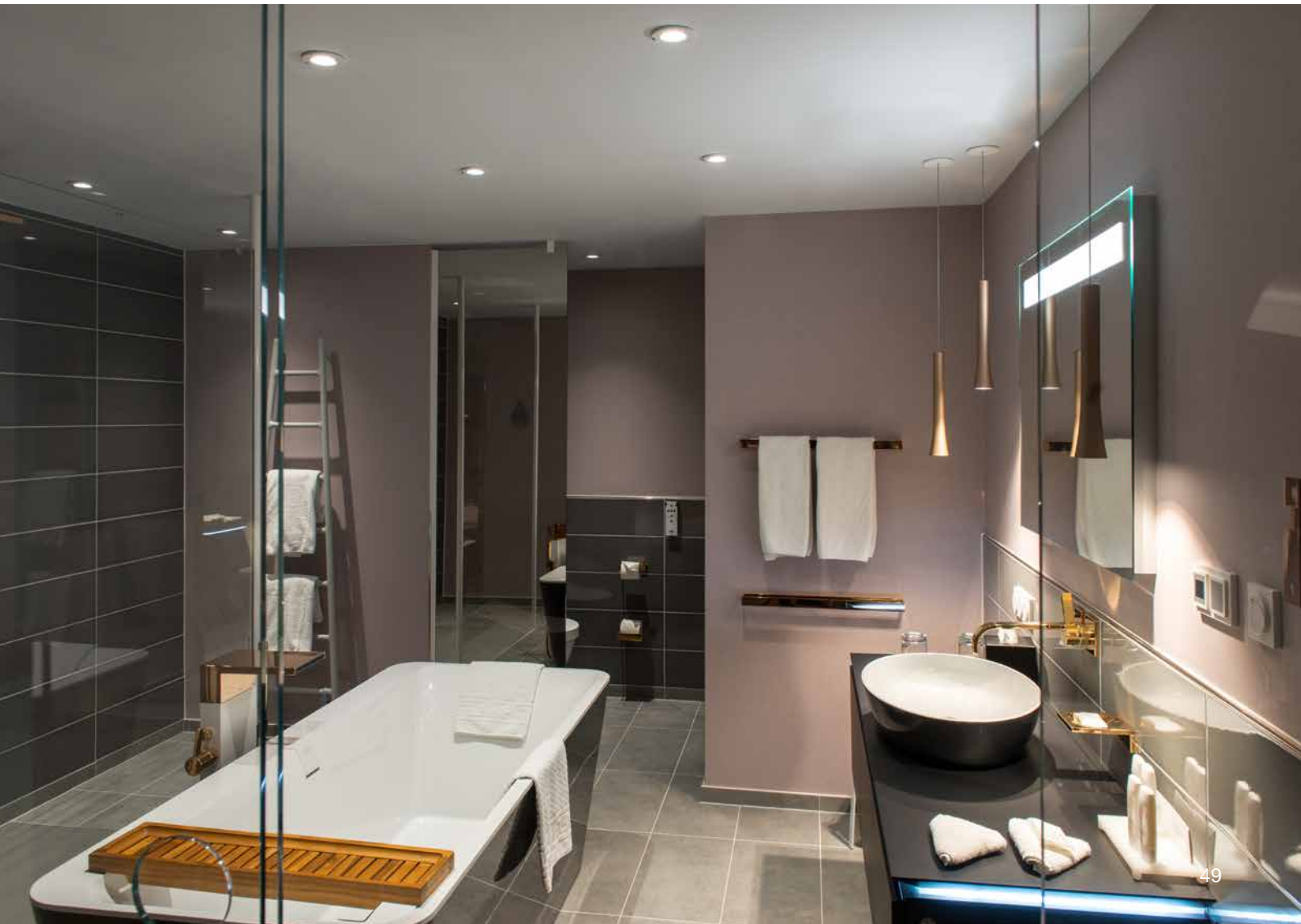

SPOT FIX

Recessed mounted spotlight for indoor use, fixed

PRODUCT FEATURES

- Color rendering index CRI: 90
- Type of protection: IP44 (room side)
- Beam angle: 36°
- Die-cast aluminum housing
- Silicon-pad protected springs
- Dimmable (with many common dimmers, see also www.ledvance.com/dim)
- Through-wiring possible

PRODUCT BENEFITS

- Energy savings of up to 90 % compared to halogen lamp spotlights
- Powerselect: Brightness adjustment via dip switches on the driver
- Easy replacement of external driver thanks to plug with bayonet lock
- Easy installation and electrical connection thanks to tool-free electrical connectors
- SCALE Design – great appearance, valuable materials and small size fits into every surrounding
- 5 years guarantee

AREAS OF APPLICATION

- Direct replacement for recessed spotlights with halogen lamps
- General illumination
- Hotel rooms and corridors
- Bars, restaurants
- Accent lighting
- Galleries, museums
- Residential interiors

EQUIPMENT / ACCESSORIES

- External control gear included with dip-switches to select power during installation
- Refurbishment rings are available as accessory
- Selected DALI 2.0 driver available as accessory

FURTHER PRODUCT DETAILS

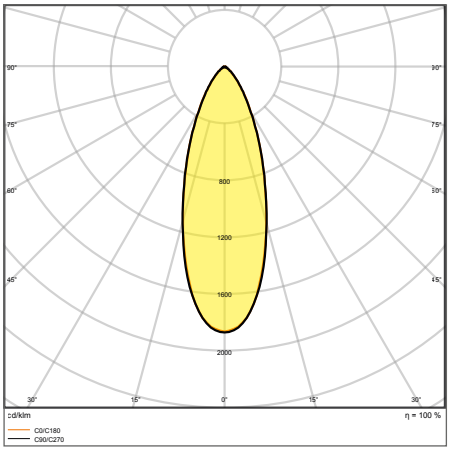

SP FIX P 8W 927 PS DIM IP44 WT

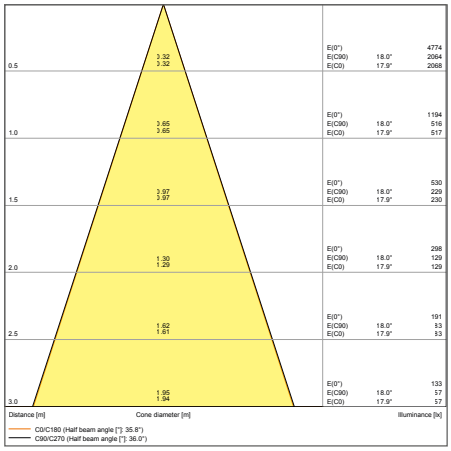

SP FIX P 8W 927 PS DIM IP44 WT

The pictures shown in the catalog are for illustration purposes only. For information on size and color, please refer to the product table.

FURTHER PRODUCT DETAILS

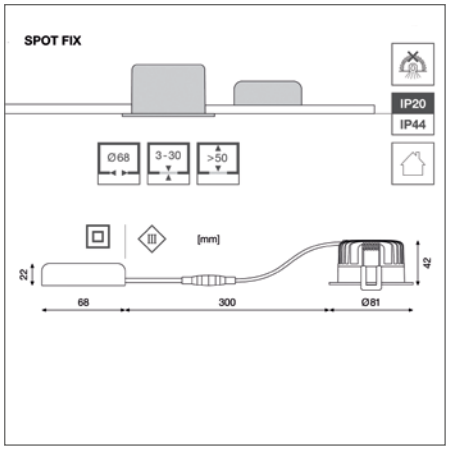

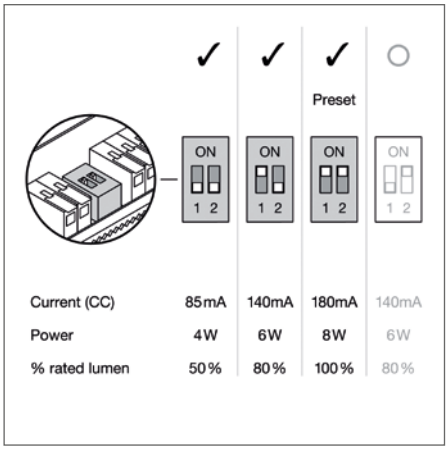

SPOT FIX

Recessed mounted spotlight for indoor use, fixed

PERFORMANCE CLASS

FLICKER VALUE <5%

CRI 90

IP20 IP44

LEDVANCE 5 year guarantee [1]

Product name	EAN (GTIN)	El.nr.	Replacement for	W	lm	lm/W	K	L70 [2]	°		L × W × H [mm] Ø × H [mm]
SP FIX P 8W 927 PS DIM IP44 WT	4058075**799523**	**3208942**	75 W HAL	8	640	80	2700	50000	36	Phase Cut	81 × 42
SP FIX P 8W 930 PS DIM IP44 WT	4058075**799547**	**3208943**	75 W HAL	8	680	85	3000	50000	36	Phase Cut	81 × 42
SP FIX P 8W 940 PS DIM IP44 WT	4058075**799561**	—	75 W HAL	8	720	90	4000	50000	36	Phase Cut	81 × 42
SP FIX P 8W 927 PS DIM IP44 BK	4099854**000126**	**3208944**	75 W HAL	8	640	80	2700	50000	36	Phase Cut	81 × 42
SP FIX P 8W 930 PS DIM IP44 BK	4058075**799585**	**3208945**	75 W HAL	8	680	85	3000	50000	36	Phase Cut	81 × 42
SP FIX P 8W 930 PS DIM IP44 SI	4058075**799608**	**3208946**	75 W HAL	8	680	85	3000	50000	36	Phase Cut	81 × 42

[1] Refer to www.ledvance.com/guarantee for precise conditions
[2] t[h]: L70/B50 @ 25 °C (T_a)/t[h]: L80/B10 @ 25 °C (T_a)

SPOT ADJUST

Recessed mounted spotlight for indoor use, adjustable

PRODUCT FEATURES

- Adjustable swivel angle: ±25°
- Color rendering index CRI: 90
- Beam angle: 36°
- Die-cast aluminum housing
- Silicon-pad protected springs
- Dimmable (with many common dimmers, see also www.ledvance.com/dim)
- Through-wiring possible

PRODUCT BENEFITS

- Energy savings of up to 90 % compared to halogen lamp spotlights
- Powerselect: Brightness adjustment via dip switches on the driver
- Easy replacement of external driver thanks to plug with bayonet lock
- Easy installation and electrical connection thanks to tool-free electrical connectors
- SCALE Design – great appearance, valuable materials and small size fits into every surrounding
- 5 years guarantee

AREAS OF APPLICATION

- Direct replacement for recessed spotlights with halogen lamps
- General illumination
- Hotel rooms and corridors
- Bars, restaurants
- Accent lighting
- Galleries, museums
- Residential interiors

EQUIPMENT / ACCESSORIES

- External control gear included with dip-switches to select power during installation
- Refurbishment rings are available as accessory
- Selected DALI 2.0 driver available as accessory

FURTHER PRODUCT DETAILS

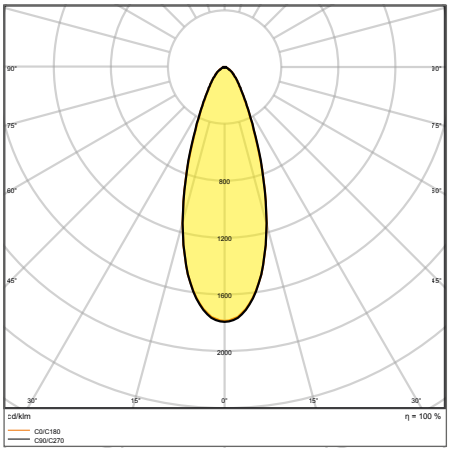

SP ADJ P 8W 927 PS DIM IP20 WT

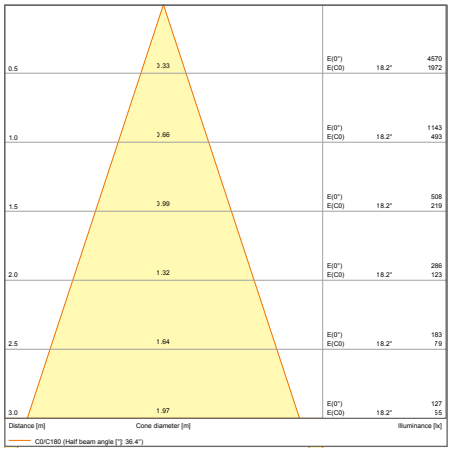

SP ADJ P 8W 927 PS DIM IP20 WT

The pictures shown in the catalog are for illustration purposes only. For information on size and color, please refer to the product table.

FURTHER PRODUCT DETAILS

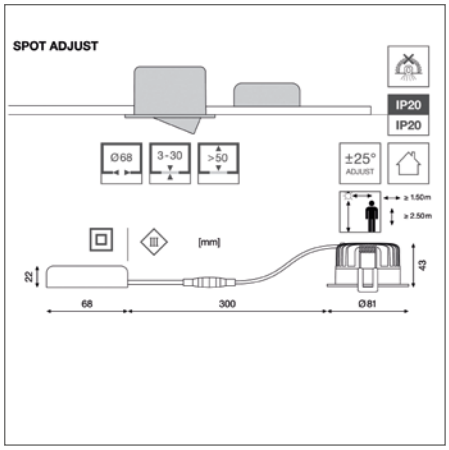

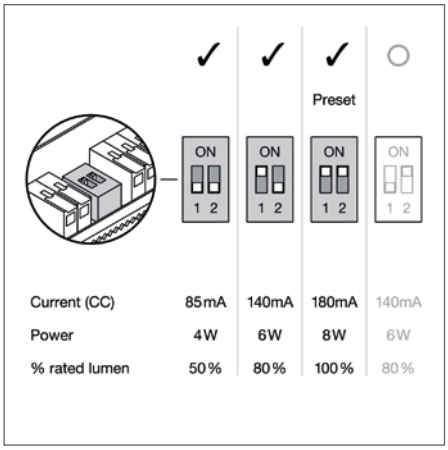

SPOT ADJUST

Recessed mounted spotlight for indoor use, adjustable

PERFORMANCE CLASS

FLICKER VALUE <5%

CRI 90

IP20

LEDVANCE 5 year guarantee [1]

Product name	EAN (GTIN)	El.nr.	Replacement for	W	lm	lm/W	K	L70 [2]	°		L × W × H [mm] Ø × H [mm]
SP ADJ P 8W 927 PS DIM IP20 WT	4058075**799622**	**3208930**	75W HAL	8	640	80	2700	50000	36	Phase Cut	81 × 43
SP ADJ P 8W 930 PS DIM IP20 WT	4058075**799646**	**3208931**	75W HAL	8	680	85	3000	50000	36	Phase Cut	81 × 43
SP ADJ P 8W 940 PS DIM IP20 WT	4058075**799660**	**3208932**	75W HAL	8	720	90	4000	50000	36	Phase Cut	81 × 43
SP ADJ P 8W 927 PS DIM IP20 BK	4099854**000140**	**3208933**	75W HAL	8	640	80	2700	50000	36	Phase Cut	81 × 43
SP ADJ P 8W 930 PS DIM IP20 BK	4058075**799684**	**3208934**	75W HAL	8	680	85	3000	50000	36	Phase Cut	81 × 43
SP ADJ P 8W 930 PS DIM IP20 SI	4058075**799707**	**3208935**	75W HAL	8	680	85	3000	50000	36	Phase Cut	81 × 43

[1] Refer to www.ledvance.com/guarantee for precise conditions
[2] t[h]: L70/B50 @ 25 °C (T_a)/t[h]: L80/B10 @ 25 °C (T_a)

SPOT DARKLIGHT

Recessed mounted spotlight with improved anti-glare light-comfort UGR < 19, fixed

PRODUCT FEATURES

- Color rendering index
- Type of protection: IP44 (room side)
- Beam angle: 36°
- Die-cast aluminum housing
- Silicon-pad protected springs
- Dimmable (with many common dimmers, see also www.ledvance.com/dim)
- Through-wiring possible

PRODUCT BENEFITS

- Darklight: Special construction for enhanced low-glare light-comfort
- Stealth appearance thanks to extra small bezel
- Powerselect: Brightness adjustment via dip switches on the driver
- Easy replacement of external driver thanks to plug with bayonet lock
- Easy installation and electrical connection thanks to tool-free electrical connectors
- SCALE Design – great appearance, valuable materials and small size fits into every surrounding
- 5 years guarantee

AREAS OF APPLICATION

- Direct replacement for recessed spotlights with halogen lamps
- General illumination
- Hotel rooms and corridors
- Bars, restaurants
- Accent lighting
- Galleries, museums
- Residential interiors

EQUIPMENT / ACCESSORIES

- External control gear included with dip-switches to select power during installation
- Refurbishment rings are available as accessory
- Selected DALI 2.0 driver available as accessory

FURTHER PRODUCT DETAILS

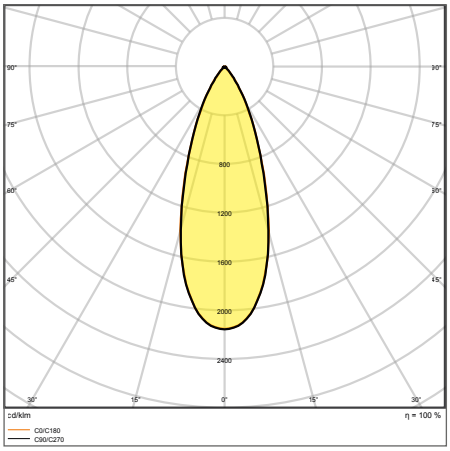

SP DK FIX P 8W 927 PS DIM IP44 WT

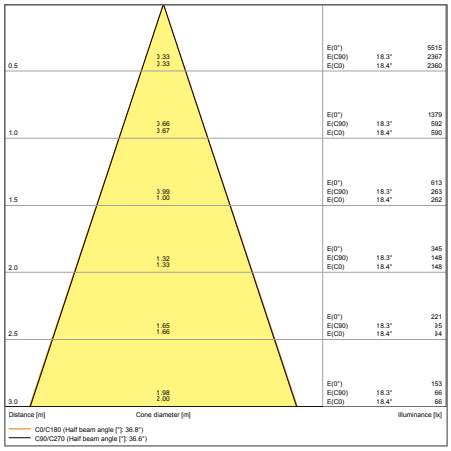

SP DK FIX P 8W 927 PS DIM IP44 WT

The pictures shown in the catalog are for illustration purposes only. For information on size and color, please refer to the product table.

FURTHER PRODUCT DETAILS

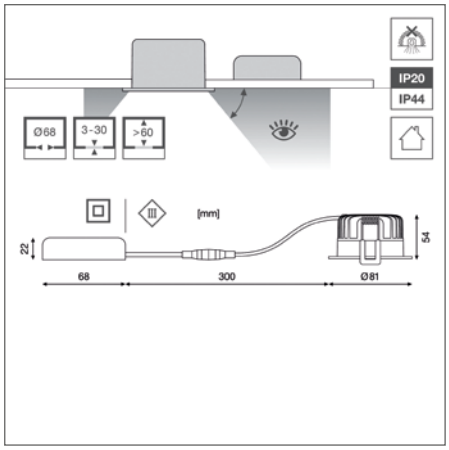

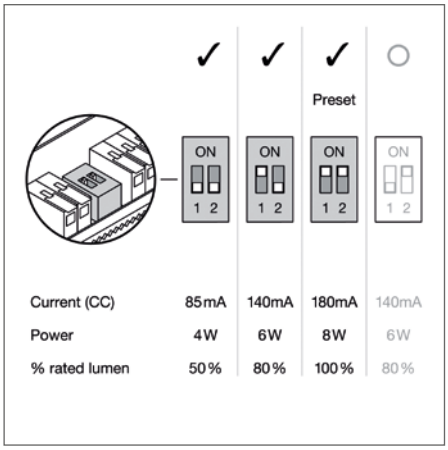

SPOT DARKLIGHT

Recessed mounted spotlight with improved anti-glare light-comfort UGR < 19, fixed

PERFOR-MANCE CLASS | FLICKER VALUE <5% | UGR <19 | CRI 90 | IP20 IP44 | LEDVANCE 5 year guarantee [1]

Product name	EAN (GTIN)	El.nr.	Replacement for	W	lm	lm/W	K	L70 [2]	°		L × W × H [mm] Ø × H [mm]
SP DK FIX P 8W 927 PS DIM IP44 WT	4058075**799806**	**3208947**	75W HAL	8	640	80	2700	50000	36	Phase Cut	81 × 54
SP DK FIX P 8W 930 PS DIM IP44 WT	4058075**799820**	**3208948**	75W HAL	8	680	85	3000	50000	36	Phase Cut	81 × 54
SP DK FIX P 8W 940 PS DIM IP44 WT	4058075**799844**	—	75W HAL	8	720	90	4000	50000	36	Phase Cut	81 × 54
SP DK FIX P 8W 927 PS DIM IP44 BK	4099854**000164**	**3208949**	75W HAL	8	640	80	2700	50000	36	Phase Cut	81 × 54
SP DK FIX P 8W 930 PS DIM IP44 BK	4058075**799868**	**3208950**	75W HAL	8	680	85	3000	50000	36	Phase Cut	81 × 54
SP DK FIX P 8W 930 PS DIM IP44 SI	4058075**799882**	**3208951**	75W HAL	8	680	85	3000	50000	36	Phase Cut	81 × 54

[1] Refer to www.ledvance.com/guarantee for precise conditions
[2] t[h]: L70/B50 @ 25 °C (T_a)/t[h]: L80/B10 @ 25 °C (T_a)

SPOT FIRE RATED

Recessed mounted spotlight for certain fire-resistant ceilings, fixed

PRODUCT FEATURES

- Color rendering index CRI: 90
- Type of protection: IP65 (room side)
- Beam angle: 36°
- Die-cast aluminum housing
- Thermal expansion ribbon already preinstalled
- Silicon-pad protected springs
- Dimmable (with many common dimmers, see also www.ledvance.com/dim)
- Through-wiring possible

PRODUCT BENEFITS

- Fire-rated: Designed and tested to meet fire rating standards (in certain fire rated ceilings)
- Airtight construction for reduced air-leakage and limited energy loss
- Powerselect: Brightness adjustment via dip switches on the driver
- Easy replacement of external driver thanks to plug with bayonet lock
- Easy installation and electrical connection thanks to tool-free electrical connectors
- SCALE Design – great appearance, valuable materials and small size fits into every surrounding
- 5 years guarantee

AREAS OF APPLICATION

- Direct replacement for recessed spotlights with halogen lamps
- Fire resistent ceilings
- Hotel rooms and corridors
- Bars, restaurants
- Galleries, museums

EQUIPMENT / ACCESSORIES

- External control gear included with dip-switches to select power during installation
- Selected DALI 2.0 driver available as accessory

FURTHER PRODUCT DETAILS

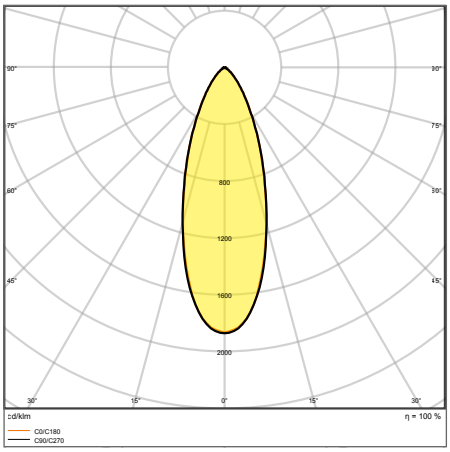

SP FP FIX P 8W 927 PS DIM IP65 WT

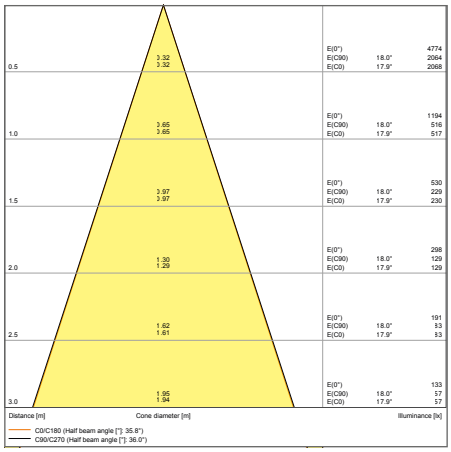

SP FP FIX P 8W 927 PS DIM IP65 WT

SAFETY ADVICE

Installation hints in the current user instruction (www.ledvance.com) must be observed.
Coordination with your responsible fire safety inspector is required in advance.

The pictures shown in the catalog are for illustration purposes only. For information on size and color, please refer to the product table.

FURTHER PRODUCT DETAILS

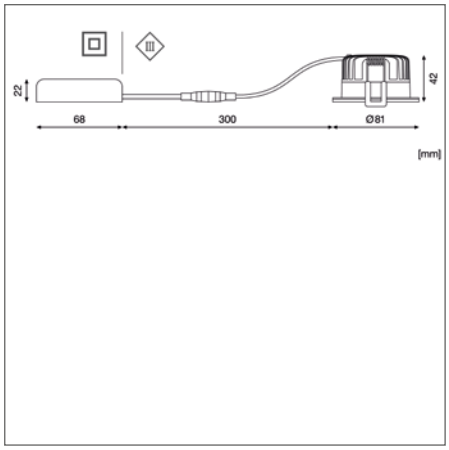

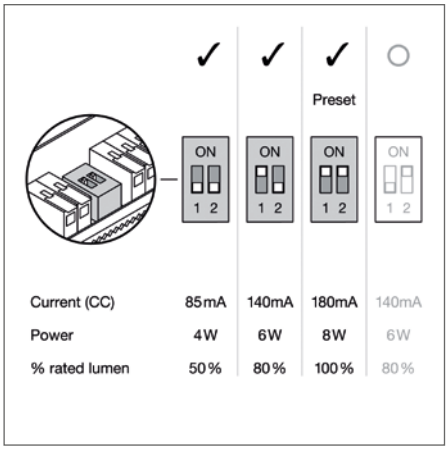

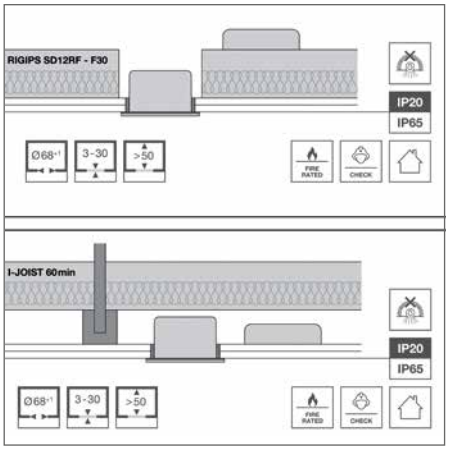

SPOT FIRE RATED

Recessed mounted spotlight for certain fire-resistant ceilings, fixed

PERFOR-MANCE CLASS | FLICKER VALUE <5% | CRI 90 | IP20 IP65 | LEDVANCE 5 year guarantee [1]

Product name	EAN (GTIN)	El.nr.	Replacement for	W	lm	lm/W	K	L70 [2]	°		L × W × H [mm] Ø × H [mm]
SP FP FIX P 8W 927 PS DIM IP65 WT	4058075**799721**	**3208524**	75W HAL	8	640	80	2700	50000	36	Phase Cut	81 × 42
SP FP FIX P 8W 930 PS DIM IP65 WT	4058075**799745**	**3208525**	75W HAL	8	680	85	3000	50000	36	Phase Cut	81 × 42
SP FP FIX P 8W 940 PS DIM IP65 WT	4058075**799769**	**3208528**	75W HAL	8	720	90	4000	50000	36	Phase Cut	81 × 42
SP FP FIX P 8W 927 PS DIM IP65 BK	4099854**000027**	**3208526**	75W HAL	8	640	80	2700	50000	36	Phase Cut	81 × 42
SP FP FIX P 8W 930 PS DIM IP65 BK	4058075**799783**	**3208527**	75W HAL	8	680	85	3000	50000	36	Phase Cut	81 × 42

[1] Refer to www.ledvance.com/guarantee for precise conditions
[2] t[h]: L70/B50 @ 25 °C (T_a)/t[h]: L80/B10 @ 25 °C (T_a)

SPOT AIR FIX

Recessed mounted spotlight for low-energy and narrow ceilings, fixed

PRODUCT FEATURES

- Color rendering index CRI: 90
- Type of protection: IP65 (room side)
- Beam angle: 36°
- Die-cast aluminum housing
- Silicon-pad protected springs
- Dimmable (with many common dimmers, see also www.ledvance.com/dim)
- Through-wiring possible

PRODUCT BENEFITS

- Airtight construction for reduced air-leakage and limited energy loss
- Coverable by many types of thermal insulation material
- Low profile enables installation into shallow ceiling voids
- Powerselect: Brightness adjustment via dip switches on the driver
- Easy replacement of external driver thanks to plug with bayonet lock
- Easy installation and electrical connection thanks to tool-free electrical connectors
- SCALE Design – great appearance, valuable materials and small size fits into every surrounding
- 5 years guarantee

AREAS OF APPLICATION

- Direct replacement for recessed spotlights with halogen lamps
- Ceilings in low-energy houses
- General illumination
- Hotel rooms and corridors
- Bars, restaurants
- Accent lighting
- Residential interiors

EQUIPMENT / ACCESSORIES

- External control gear included with dip-switches to select power during installation

FURTHER PRODUCT DETAILS

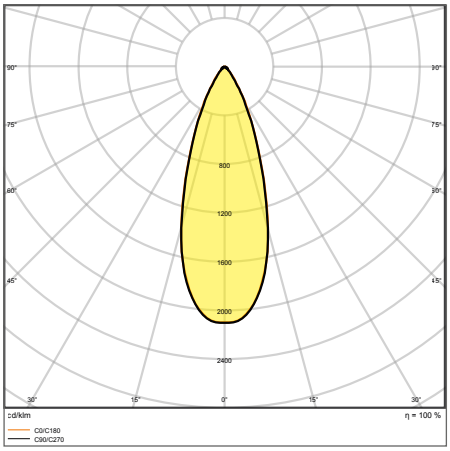

SP AIR FIX P 6W 927 PS DIM IP65 WT

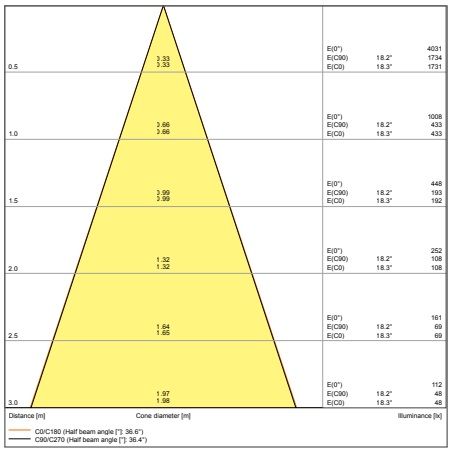

SP AIR FIX P 6W 927 PS DIM IP65 WT

SAFETY ADVICE

Installation hints in the current user instruction (www.ledvance.com) must be observed.
If there is a moisture barrier foil, the spacer SP HOLDER must be used!

The pictures shown in the catalog are for illustration purposes only. For information on size and color, please refer to the product table.

FURTHER PRODUCT DETAILS

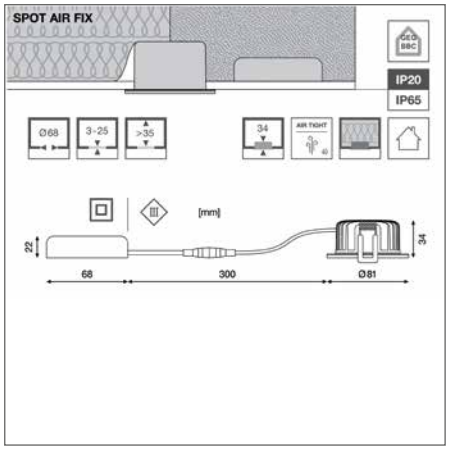

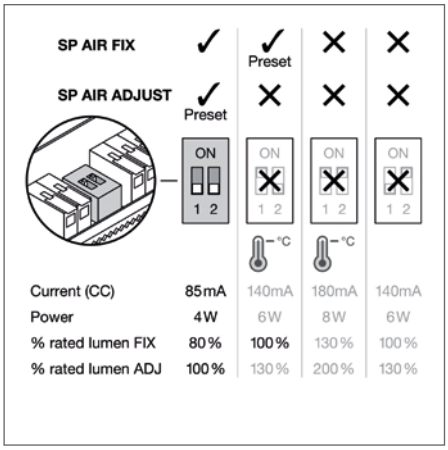

SPOT AIR FIX

Recessed mounted spotlight for low energy and narrow ceilings, fixed

PERFOR-MANCE CLASS

FLICKER VALUE <5%

CRI 90

IP20 IP65

LEDVANCE 5 year guarantee [1]

Product name	EAN (GTIN)	El.nr.	Replacement for	W	lm	lm/W	K	L70 [2]	°		L × W × H [mm] Ø × H [mm]
SP AIR FIX P 6W 927 PS DIM IP65 WT	4058075**799905**	**3208952**	50W HAL	6	480	80	2700	50000	36	Phase Cut	81 x 34
SP AIR FIX P 6W 930 PS DIM IP65 WT	4058075**799929**	**3208953**	50W HAL	6	510	85	3000	50000	36	Phase Cut	81 x 34
SP AIR FIX P 6W 940 PS DIM IP65 WT	4058075**799943**	—	50W HAL	6	570	95	4000	50000	36	Phase Cut	81 x 34
SP AIR FIX P 6W 927 PS DIM IP65 BK	4099854**000188**	**3208954**	50W HAL	6	480	80	2700	50000	36	Phase Cut	81 x 34
SP AIR FIX P 6W 930 PS DIM IP65 BK	4058075**799967**	**3208955**	50W HAL	6	510	85	3000	50000	36	Phase Cut	81 x 34
SP AIR FIX P 6W 930 PS DIM IP65 SI	4058075**799981**	**3208956**	50W HAL	6	510	85	3000	50000	36	Phase Cut	81 x 34

[1] Refer to www.ledvance.com/guarantee for precise conditions
[2] t[h]: L70/B50 @ 25 °C (T_a)/t[h]: L80/B10 @ 25 °C (T_a)

SPOT AIR ADJUST

Recessed mounted spotlight for low-energy and narrow ceilings, adjustable

PRODUCT FEATURES

- Adjustable swivel angle: ±25°
- Color rendering index CRI: 90
- Type of protection: IP23 (room side)
- Beam angle: 36°
- Die-cast aluminum housing
- Silicon-pad protected springs
- Dimmable (with many common dimmers, see also www.ledvance.com/dim)
- Through-wiring possible

PRODUCT BENEFITS

- Airtight construction for reduced air-leakage and limited energy loss
- Coverable by many types of thermal insulation material
- Low profile enables installation into shallow ceiling voids
- Easy replacement of external driver thanks to plug with bayonet lock
- Easy installation and electrical connection thanks to tool-free electrical connectors
- SCALE Design – great appearance, valuable materials and small size fits into every surrounding
- 5 years guarantee

AREAS OF APPLICATION

- Direct replacement for recessed spotlights with halogen lamps
- Ceilings in low-energy houses
- General illumination
- Hotel rooms and corridors
- Bars, restaurants
- Accent lighting
- Residential interiors

EQUIPMENT / ACCESSORIES

- External control gear included

FURTHER PRODUCT DETAILS

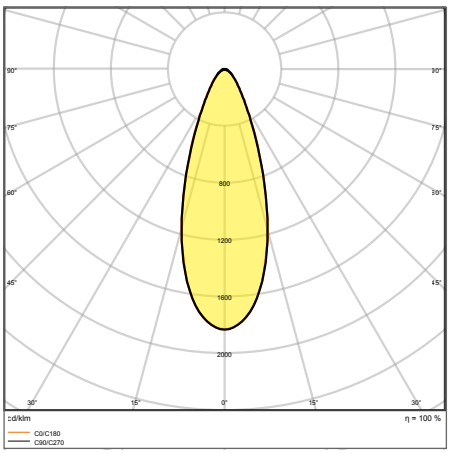

SP AIR ADJ P 4W 927 DIM IP23 WT

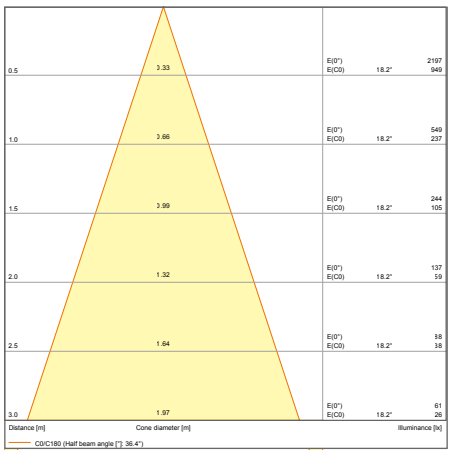

SP AIR ADJ P 4W 927 DIM IP23 WT

SAFETY ADVICE

Installation hints in the current user instruction (www.ledvance.com) must be observed.
If there is a moisture barrier foil, the spacer SP HOLDER must be used!

The pictures shown in the catalog are for illustration purposes only. For information on size and color, please refer to the product table.

FURTHER PRODUCT DETAILS

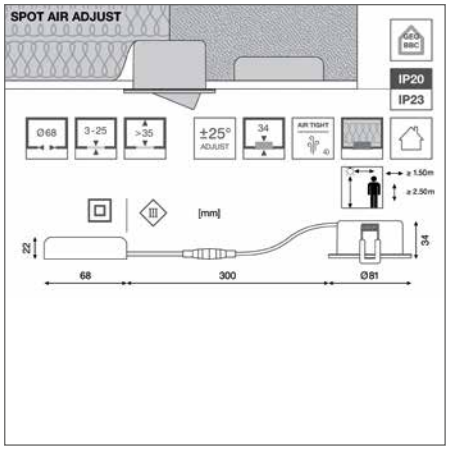

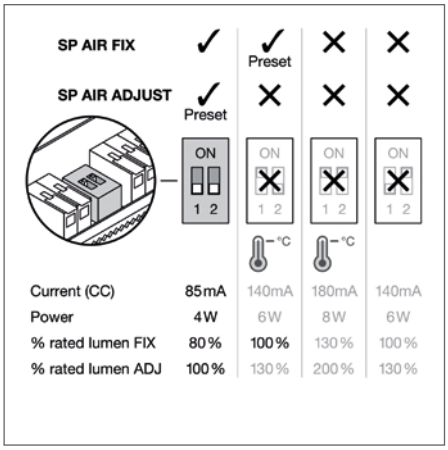

SPOT AIR ADJUST

Recessed mounted spotlight for low-energy and narrow ceilings, adjustable

PERFOR-MANCE CLASS

FLICKER VALUE <5%

CRI 90

IP20 / IP23

LEDVANCE 5 year guarantee [1]

Product name	EAN (GTIN)	El.nr.	Replacement for	W	lm	lm/W	K	L70 [2]	°		L × W × H [mm] Ø × H [mm]
SP AIR ADJ P 4W 927 DIM IP23 WT LEDV	4099854**000003**	**3208936**	35 W HAL	4	300	75	2700	50000	36	Phase Cut	81 x 34
SP AIR ADJ P 4W 930 DIM IP23 WT LEDV	4099854**000041**	**3208937**	35 W HAL	4	320	80	3000	50000	36	Phase Cut	81 x 34
SP AIR ADJ P 4W 940 DIM IP23 WT LEDV	4099854**000065**	**3208938**	35 W HAL	4	340	85	4000	50000	36	Phase Cut	81 x 34
SP AIR ADJ P 4W 927 DIM IP23 BK LEDV	4099854**000201**	**3208939**	35 W HAL	4	300	75	2700	50000	36	Phase Cut	81 x 34
SP AIR ADJ P 4W 930 DIM IP23 BK LEDV	4099854**000089**	**3208940**	35 W HAL	4	320	80	3000	50000	36	Phase Cut	81 x 34
SP AIR ADJ P 4W 930 DIM IP23 SI LEDV	4099854**000102**	**3208941**	35 W HAL	4	320	80	3000	50000	36	Phase Cut	81 x 34

[1] Refer to www.ledvance.com/guarantee for precise conditions
[2] t[h]: L70/B50 @ 25 °C (T_a)/t[h]: L80/B10 @ 25 °C (T_a)

SPOT ACCESSORIES

Spot accessories for SPOT FIX, ADJUST, DARKLIGHT, FIRE RATED, AIR FIX and AIR ADJUST

1

2

3

4

5

6

SPOT RING

Refurbishment rings to reduce existing cut-out in recessed ceilings

PRODUCT FEATURES

- Material: deep-drawn steel
- Suitable only for LEDVANCE SPOTs in 68 mm cut-out
- Silicon-pad protected springs

PRODUCT BENEFITS

- Retrofit: Replacement of old recessed lights with LEDVANCE SPOTs FIX or ADJ in latest LED-technology
- Standardize: Reduce existing cut-outs to a standard cut-out of 68 mm
- Versatile: Refurbishment rings for padding cut-out holes from ∅ 68 – ∅ 90 mm or ∅ 68 – ∅ 115 mm or ∅ 115 – ∅ 160 mm

AREAS OF APPLICATION

- Refurbishment of existing cut-outs in recessed ceilings

SPOT HOLDER

Spacer to increase distance between spotlight and thermal insulation material

PRODUCT FEATURES

- Material: fibre-reinforced polyamide PA66
- Glow Wire Test according to IEC 60695-2-12: 850 °C
- Suitable only for LEDVANCE SPOTs in 68 mm cut-out

PRODUCT BENEFITS

- Increase distance between spotlight and thermal insulation material
- Protects moisture barrier foil from hot surface of spotlight and driver
- Robust: 4-leg spacer to hold thermal insulation material
- Improved lifetime for LED and driver thanks to increased air-volume

AREAS OF APPLICATION

- Ceilings in low-energy houses
- Ceilings with thermal insulation material

The pictures shown in the catalog are for illustration purposes only. For information on size and color, please refer to the product table.

CONNECTOR BOX

Toolless electrical connection of luminaires und LED-drivers

PRODUCT FEATURES

- Connector box with push wire terminal for tool-free connection
- Suitable for recessed On-/Off-luminaires of the electric class II (L/N version)

PRODUCT BENEFITS

- Through-wiring possible on the primary side

AREAS OF APPLICATION

- For use in recessed ceilings

SPOT DRIVER

Professional DALI driver for LEDVANCE 8 W SPOTS

PRODUCT FEATURES

- IoT-ready driver with DALI-2 technology
- Push DIM function for dimming and switching directly on a pushbutton
- Suitable for emergency central battery installations acc. to EN 60598-2-22
- Twist & lock connector for ease of installation

PRODUCT BENEFITS

- DALI driver with individual luminaire current set-up already installed
- Extended services such as energy monitoring and remote maintenance possible with DALI versions
- Easy replacement of external driver thanks to plug with bayonet lock

AREAS OF APPLICATION

- DALI installations
- Can only be used with LEDVANCE SPOTs 8 W (CC 180 mA)
- Do not cover with any thermal insulation material

SPOT ACCESSORIES

Product name	EAN (GTIN)	El.nr.	L × W × H [mm] Ø × H [mm]	W	MATERIAL	COLOR	No.
SP RING D100 WT	4099854**136511**	—	100 × 4	—	Steel	White	1
SP RING D100 BK	4099854**136542**	—	100 × 4	—	Steel	Black	—
SP RING D133 WT	4099854**013355**	3252689	133 × 3	—	Steel	White	2
SP RING D133 BK	4099854**013386**	3252690	133 × 3	—	Steel	Black	—
SP RING D180 WT	4099854**013416**	—	180 × 3	—	Steel	White	3
SP RING D180 BK	4099854**013447**	3252691	180 × 3	—	Steel	Black	—
SP HOLDER DN68 H65	4099854**013478**	3252692	93 × 93 × 73	—	Polyamid (PA)	Grey	4
CONNECTOR BOX 3POLE L/N/E	4099854**013508**	3208957	94 × 35 × 22	—	Polycarbonate (PC)	White	5
SP DRIVER DALI 8W	4099854**089558**	—	120 × 53 × 30	8	Polycarbonate (PC)	Grey	6

SAFETY ADVICE

Installation hints in the current user instruction (www.ledvance.com) must be observed
This spacer is only allowed to be used in combination with SP AIR FIX or SP AIR ADJ!

TRACKLIGHTS

REDUCED DESIGN, EXTENSIVE FUNCTIONS

TRACKLIGHT SPOT ZOOM DIM

Accurately focused light for flexible illumination

Page 66

PERFOR-MANCE CLASS

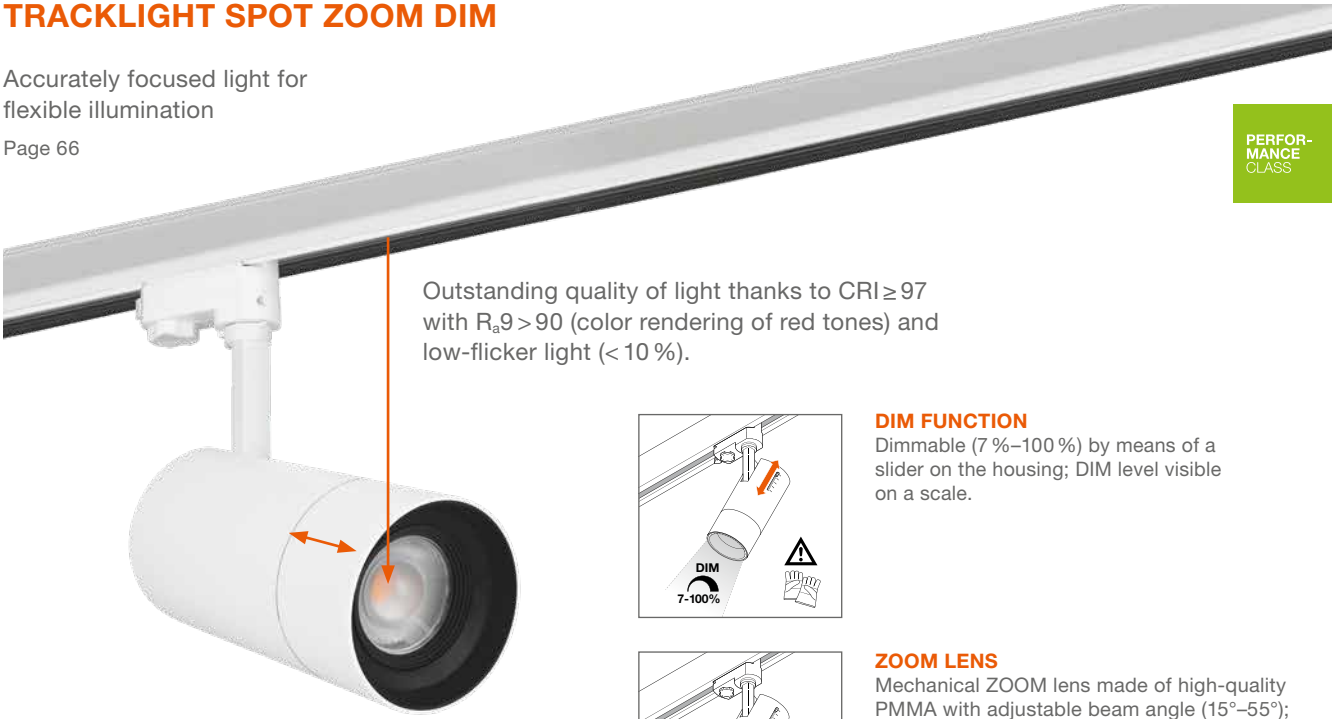

Outstanding quality of light thanks to CRI ≥ 97 with $R_a9 > 90$ (color rendering of red tones) and low-flicker light (< 10 %).

DIM FUNCTION
Dimmable (7 %–100 %) by means of a slider on the housing; DIM level visible on a scale.

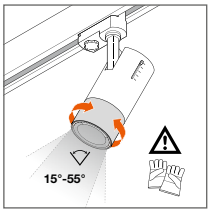

ZOOM LENS
Mechanical ZOOM lens made of high-quality PMMA with adjustable beam angle (15°–55°); angle visible on a scale on the lens holder. The ZOOM mechanism concealed in the housing keeps the shape of the housing unchanged.

Choice of color for housing:

Matt white (WT)

Matt black (BK)

OUR SPOTLIGHTS ARE ALSO CHARACTERIZED BY THE FOLLOWING SHARED QUALITY FEATURES:

- Included 3-phase adapter compatible with common power rails (such as NORLUX, GLOBAL, NUCO, NORDIC)
- High material quality thanks to die-cast aluminum housing
- High flexibility thanks to tilt and swivel joints

SCALE DESIGN

TRACKLIGHT SPOT

Simply compact – a true all-rounder: Excellent light comfort thanks to CRI 90, SDCM ≤ 3 and UGR < 16. They master a wide range of lighting tasks thanks to replaceable, dust-proof reflectors and various power levels.

Page 68

PERFOR-
MANCE
CLASS

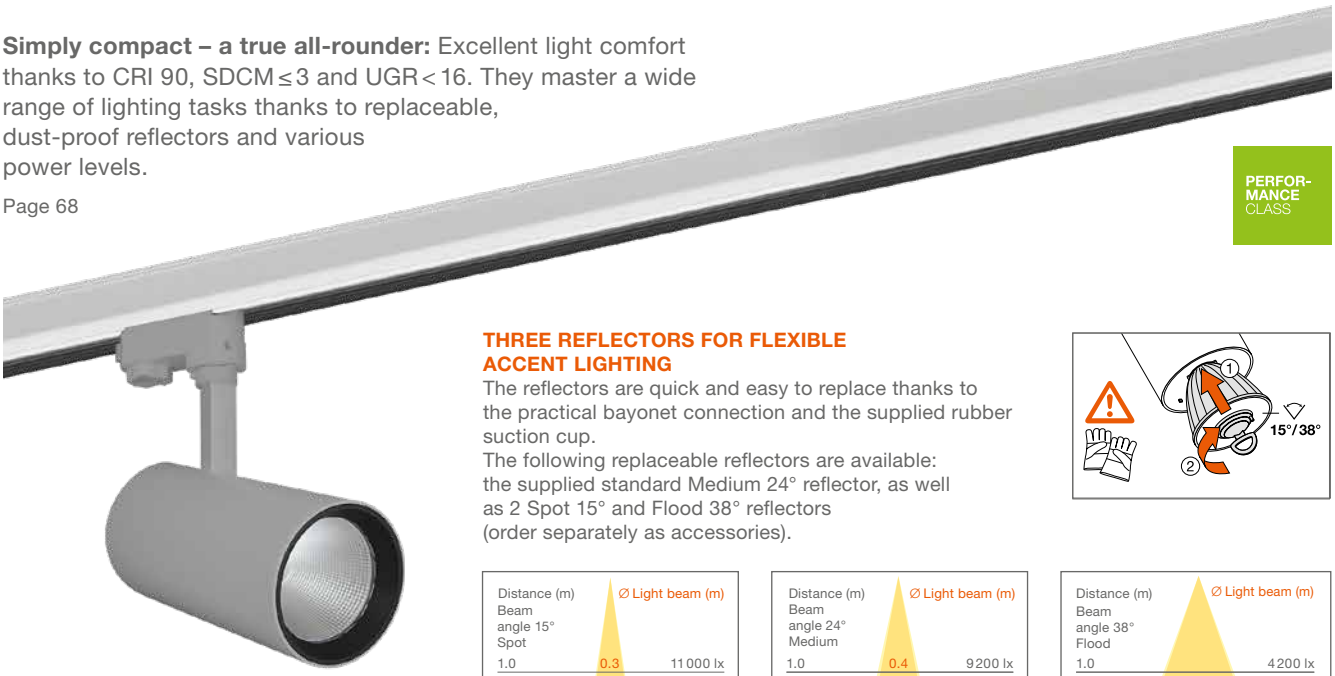

THREE REFLECTORS FOR FLEXIBLE ACCENT LIGHTING

The reflectors are quick and easy to replace thanks to the practical bayonet connection and the supplied rubber suction cup.
The following replaceable reflectors are available: the supplied standard Medium 24° reflector, as well as 2 Spot 15° and Flood 38° reflectors (order separately as accessories).

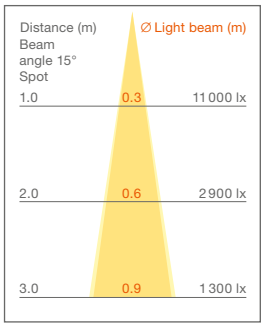

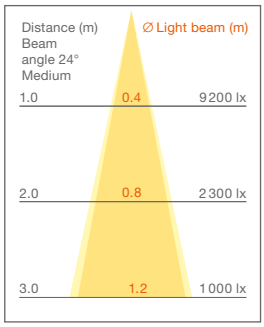

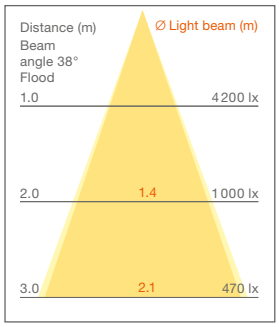

Choice of color for housing:

Matt white (WT) · Matt black (BK) · Concrete gray (GY)

EAN: 4058075113442, Tracklight Spot 25 W/3 000 K, rounded measured values

TRACKLIGHT SPOT ZOOM DIM

Dimmable 3-phase tracklight spot with mechanical zoom lens

1

2

3

PRODUCT FEATURES

- Robust die-cast aluminum housing
- Available in matt white (like RAL9016), matt black (like RAL9004)
- Very good color rendering index CRI 97 and CRI > 90
- Dimmable (7 %–100 %) via slider potentiometer directly on each luminaire
- Mechanical zoom lens with a beam angle of 15° to 55°

PRODUCT BENEFITS

- Dimmable 3-phase track-mounted spotlight with mechanical zoom optics integrated in the housing
- Included 3-phase adapter compatible with common tracks (GLOBAL, POWERGEAR, EUTRAC, STAFF, NORLUX, NUCO, NORDIC)
- High-quality spotlight thanks to excellent color rendering
- Low-flicker light
- 5 years guarantee

AREAS OF APPLICATION

- Direct replacement for luminaires using HID lamps
- Accent lighting
- Galleries, museums
- Fashion shops, accessories shops
- Shops, changing rooms, shop windows

FURTHER PRODUCT DETAILS

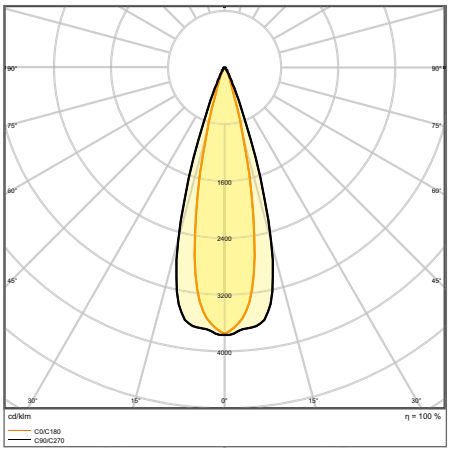

TR SP ZOOM DIM D85 25 W 3000 K 97R WT

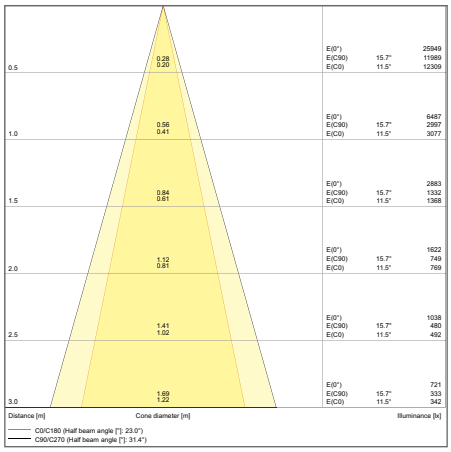

TR SP ZOOM D85 25 W 4000 K DIM 25DEG

The pictures shown in the catalog are for illustration purposes only. For information on size and color, please refer to the product table.

FURTHER PRODUCT DETAILS

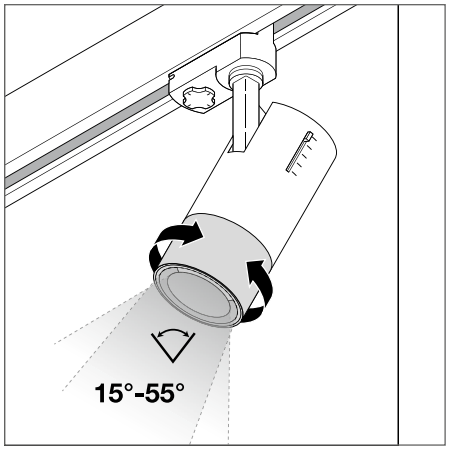

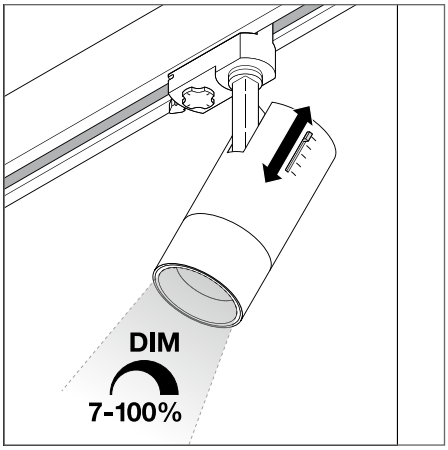

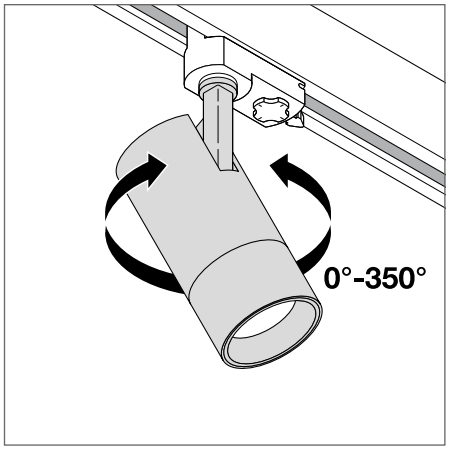

TRACKLIGHT SPOT ZOOM DIM

Dimmable 3-phase tracklight spot with mechanical zoom lens

PERFOR-MANCE CLASS

CRI 97 | IP 20 | LEDVANCE 5 year guarantee [1]

Product name	EAN (GTIN)	El.nr.	Replacement for	W	lm	lm/W	K	L70 [2]	°		L × W × H [mm] Ø × H [mm]	No.
TR SP ZOOM DIM D85 25 W 3000 K 97R WT	4058075**335769**	**3254344**	50 W HCI	25	1500	60	3000	50000	15…55	✓	85 × 265	2
TR SP ZOOM DIM D85 25 W 4000 K 97R WT	4058075**335783**	—	50 W HCI	25	1500	60	4000	50000	15…55	✓	85 × 265	2
TR SP ZOOM DIM D85 25 W 3000 K 97R BK	4058075**335806**	**3254352**	50 W HCI	25	1500	60	3000	50000	15…55	✓	85 × 265	3
TR SP ZOOM DIM D85 25 W 4000 K 97R BK	4058075**335820**	—	50 W HCI	25	1500	60	4000	50000	15…55	✓	85 × 265	3

[1] Refer to www.ledvance.com/guarantee for precise conditions
[2] t[h]: L70/B50 @ 25 °C (T_a)/t[h]: L80/B10 @ 25 °C (T_a)

TRACKLIGHT SPOT

3-phase tracklight spot with integrated control gear

1

2

3

PRODUCT FEATURES

- Robust die-cast aluminum housing
- Available in matt white (like RAL9016), matt black (like RAL9004) and concrete grey (like RAL7042)
- Very good color rendering index Ra: 90
- Rotation angle: 350°, tilt angle: 90°
- Equipped with reflectors with 24° beam angle

PRODUCT BENEFITS

- Deep reflector and black antiglare ring for minimized glare (UGR ≤ 16)
- Accessory reflectors with 15° or 38° beam angle available
- Reflector easily replaceable thanks to bayonet catch and rubber suction pad
- Included 3-phase adapter compatible with common tracks (GLOBAL, POWERGEAR, EUTRAC, STAFF, NORLUX, NUCO, NORDIC)
- Low-flicker light

AREAS OF APPLICATION

- Direct replacement for luminaires using HID lamps
- Accent lighting
- Fashion shops, accessories shops
- Retail
- Hotels, restaurants, shops

EQUIPMENT / ACCESSORIES

- Accessory reflectors with 15° or 38° beam angle available as an optional accessory

FURTHER PRODUCT DETAILS

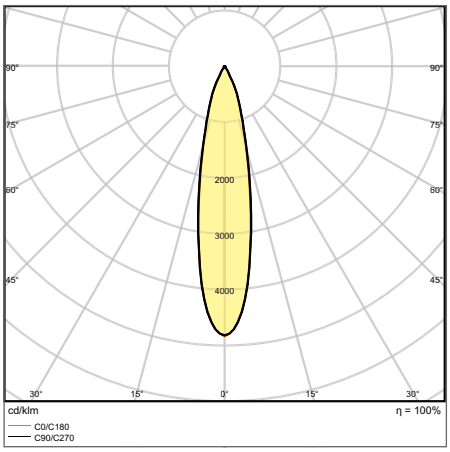

TRACK SP D95 55 W 4000 K 90RA NFL GY

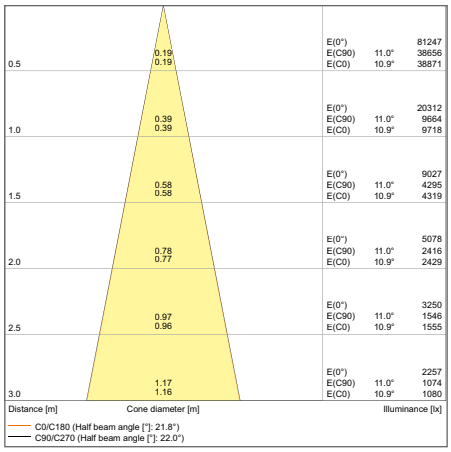

TRACK SP D95 55 W 4000 K NFL

The pictures shown in the catalog are for illustration purposes only. For information on size and color, please refer to the product table.

FURTHER PRODUCT DETAILS

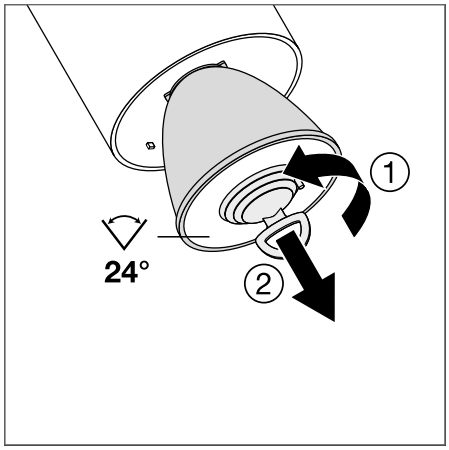

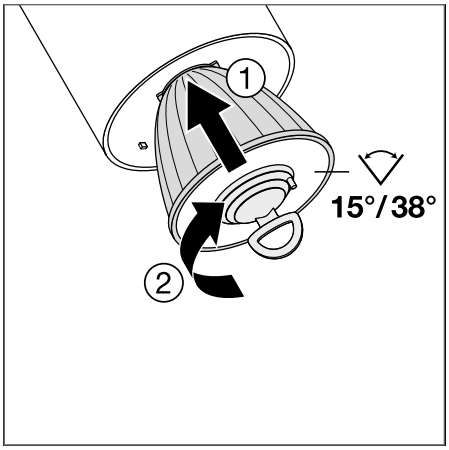

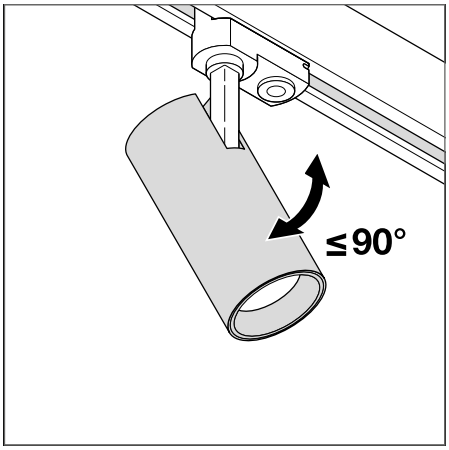

TRACKLIGHT SPOT

3-phase tracklight spot with integrated control gear

PERFOR-MANCE CLASS

FLICKER VALUE <10%

CRI 90

IP 20

LEDVANCE 5 year guarantee [1]

Product name	EAN (GTIN)	El.nr.	Replacement for	W	lm	lm/W	K	L70 [2]	∠°	L × W × H [mm] Ø × H [mm]	No.
TRACK SP D75 25 W 3000 K 90RA NFL WT	4058075**113442**	**3201949**	35 W HID	25	1750	70	3000	50000	24	75 × 255	1
TRACK SP D75 25 W 4000 K 90RA NFL WT	4058075**113466**	**3201950**	35 W HID	25	1900	75	4000	50000	24	75 × 255	1
TRACK SP D75 25 W 3000 K 90RA NFL BK	4058075**113565**	**3201955**	35 W HID	25	1750	75	3000	50000	24	75 × 255	—
TRACK SP D75 25 W 4000 K 90RA NFL BK	4058075**113589**	**3202766**	35 W HID	25	1900	80	4000	50000	24	75 × 255	—
TRACK SP D75 25 W 3000 K 90RA NFL GY	4058075**113688**	**3202771**	35 W HID	25	1750	75	3000	50000	24	75 × 255	—
TRACK SP D75 25 W 4000 K 90RA NFL GY	4058075**113701**	**3202772**	35 W HID	25	1900	75	4000	50000	24	75 × 255	—
TRACK SP D85 35 W 3000 K 90RA NFL WT	4058075**113480**	**3201951**	50 W HID	35	2660	70	3000	50000	24	85 × 267	—
TRACK SP D85 35 W 4000 K 90RA NFL WT	4058075**113503**	**3201952**	50 W HID	35	2800	75	4000	50000	24	85 × 267	—
TRACK SP D85 35 W 3000 K 90RA NFL BK	4058075**113602**	**3202767**	50 W HID	35	2660	75	3000	50000	24	85 × 267	—
TRACK SP D85 35 W 4000 K 90RA NFL BK	4058075**113626**	**3202768**	50 W HID	35	2800	80	4000	50000	24	85 × 267	—
TRACK SP D85 35 W 3000 K 90RA NFL GY	4058075**113725**	**3202773**	50 W HID	35	2660	75	3000	50000	24	85 × 267	—
TRACK SP D85 35 W 4000 K 90RA NFL GY	4058075**113749**	**3202774**	50 W HID	35	2800	75	4000	50000	24	85 × 267	—
TRACK SP D95 55 W 3000 K 90RA NFL WT	4058075**113527**	**3201953**	70 W HID	55	4000	70	3000	50000	24	95 × 297	—
TRACK SP D95 55 W 4000 K 90RA NFL WT	4058075**113541**	**3201954**	70 W HID	55	4200	75	4000	50000	24	95 × 297	—
TRACK SP D95 55 W 3000 K 90RA NFL BK	4058075**113640**	**3202769**	70 W HID	55	4000	75	3000	50000	24	95 × 297	2
TRACK SP D95 55 W 4000 K 90RA NFL BK	4058075**113664**	**3202770**	70 W HID	55	4200	80	4000	50000	24	95 × 297	2
TRACK SP D95 55 W 3000 K 90RA NFL GY	4058075**113763**	**3202775**	70 W HID	55	4000	75	3000	50000	24	95 × 297	3
TRACK SP D95 55 W 4000 K 90RA NFL GY	4058075**113787**	**3202776**	70 W HID	55	4200	75	4000	50000	24	95 × 297	3

[1] Refer to www.ledvance.com/guarantee for precise conditions
[2] t[h]: L70/B50 @ 25 °C (T_a)/t[h]: L80/B10 @ 25 °C (T_a)

TRACKLIGHT SPOT REFLECTOR

Interchangeable reflector

1

2

PRODUCT FEATURES

- Reflector easily replaceable thanks to bayonet catch and rubber suction pad
- Clear cover protects the reflector against dust and contact
- High optical efficacy
- Housing material: polycarbonate (PC)
- Accessory reflectors available in different beam angles

TRACKLIGHT SPOT REFLECTOR

Interchangeable reflector

LEDVANCE 2 year guarantee [1]

Product name	EAN (GTIN)	El.nr.	L × W × H [mm] Ø × H [mm]	MATERIAL	COLOR			No.
TRACK SP REFLECTOR D75 SP	4058075**113800**	**3203388**	63 × 53	Polycarbonate (PC)	Silver	15	1	1
TRACK SP REFLECTOR D75 FL	4058075**113824**	**3203389**	63 × 53	Polycarbonate (PC)	Silver	38	1	2
TRACK SP REFLECTOR D85 SP	4058075**113848**	**3203390**	75 × 63	Polycarbonate (PC)	Silver	15	1	1
TRACK SP REFLECTOR D85 FL	4058075**113862**	**3203391**	75 × 63	Polycarbonate (PC)	Silver	38	1	2
TRACK SP REFLECTOR D95 SP	4058075**113886**	**3203392**	82 × 69	Polycarbonate (PC)	Silver	15	1	1
TRACK SP REFLECTOR D95 FL	4058075**113909**	**3203393**	82 × 69	Polycarbonate (PC)	Silver	38	1	2

[1] Refer to www.ledvance.com/guarantee for precise conditions

WALL AND CEILING LUMINAIRES

IDEAL FOR PUBLIC AREAS

SURFACE COMPACT IK10

PERFOR-MANCE CLASS

Page 74

ROBUST, POWERFUL SURFACE-MOUNTED LUMINAIRE
- Resistant to vandalism
- Transparent cover protects against dust and moisture
- High luminous efficacy

SURFACE BULKHEAD

PERFOR-MANCE CLASS

Page 86

SURFACE BULKHEAD
SURFACE BULKHEAD SENSOR
SURFACE BULKHEAD EMERGENCY
SURFACE BULKHEAD SENSOR EMERGENCY
SURFACE BULKHEAD ACCESSORY RINGS

GREAT PERFORMANCE INDOORS AND OUTDOORS
- Extremely versatile through switchable, HF-sensor and 3 h single-battery versions
- Suitable for use in public areas thanks to high IK rating
- Easy installation on wall and ceiling with through-wiring option

SURFACE CIRCULAR

VALUE CLASS

Page 76

SURFACE CIRCULAR
SURFACE CIRCULAR 500 PS
SURFACE CIRCULAR 500 DALI
SURFACE CIRCULAR SENSOR
SURFACE CIRCULAR 500 SENSOR PS
SURFACE CIRCULAR 350 3CCT
SURFACE CIRCULAR 350 3CCT SENSOR
SURFACE CIRCULAR ACCESSORIES

FOR STANDARD APPLICATIONS
- Versions with sensor: easy adjustment of the sensor range, daylight detection and illumination time
- Energy savings of up to 55 % compared with luminaires that use compact fluorescent lamps
- Quick and easy installation

SURFACE SQUARE

VALUE CLASS

Page 82

SURFACE SQUARE 330
SURFACE SQUARE 330 SENSOR
SURAFCE SQUARE 330 3CCT
SURFACE SQUARE 330 3CCT SENSOR
SURFACE SQUARE COVER

FOR STANDARD APPLICATIONS
- Luminaire versions available with and without high frequency sensor and selectable CCT
- Energy savings of up to 55 % compared to luminaires that use compact fluorescent lamps
- Easy and quick installation

ROBUST, RUGGED AND VANDAL-PROOF

LEDVANCE SURFACE BULKHEAD and **LEDVANCE SURFACE COMPACT IK10** are characterized by rugged design, an impact-resistant housing made of reinforced polycarbonate with IK10 rating, and high IP65 degree of protection. Torx screws make it harder for the luminaires to be removed with a conventional screwdriver, making them ideally protected against vandalism.

INTELLIGENT SENSOR TECHNOLOGY

SENSORS FOR SAFETY AND EFFICIENCY

LEDVANCE SURFACE BULKHEAD, CIRCULAR and SQUARE luminaires are available with state-of-the-art sensor technology. The flexible adjustment options allow illumination as required. This allows for light comfort and safety to be combined with maximum efficiency:

- HF sensor technology for motion detection
- Four-step twilight switching; activation adjustable between 2 and 50 lux
- Motion sensor with wide detection range (for wall and ceiling mounting); adjustable in five steps between 10 and 100 percent
- Hold time from 5 seconds to 30 minutes

Motion sensor with many adjustment options

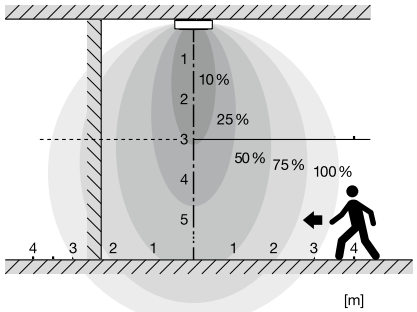

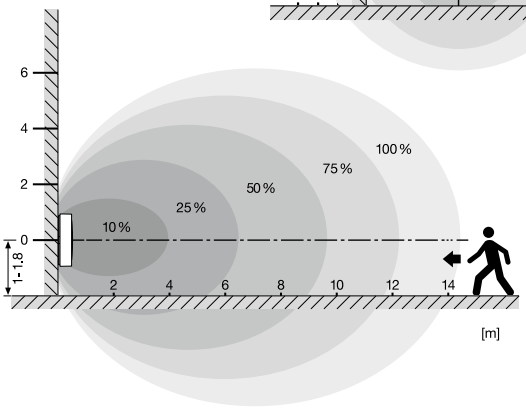

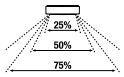

Detection Area

Hold Time

Daylight Sensor

SURFACE COMPACT IK10

Wall and ceiling luminaire with high impact resistance

PRODUCT FEATURES

- Housing and cover made from polycarbonate
- Impact resistance: IK10
- Glow Wire Test according to IEC 60695-2-12: 850 °C
- Through-wiring possible

PRODUCT BENEFITS

- Resistance against vandalism
- Transparent cover protects against dust and moisture
- LED protected for safe installation
- High luminous efficacy
- 5 years guarantee

AREAS OF APPLICATION

- Corridors
- Stairways
- Bathrooms
- Foyers
- Public areas

FURTHER PRODUCT DETAILS

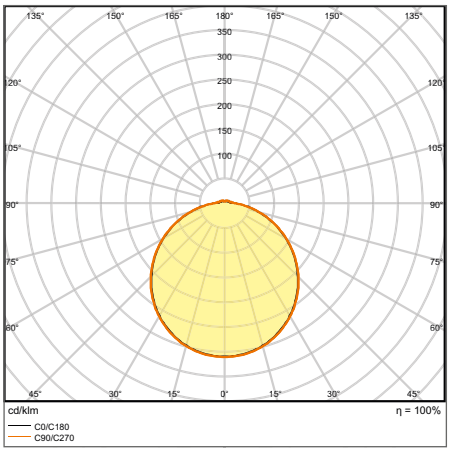

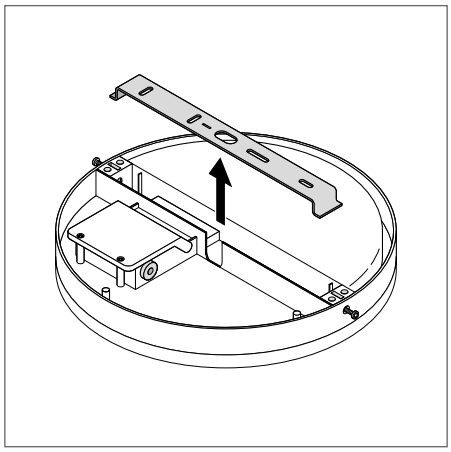

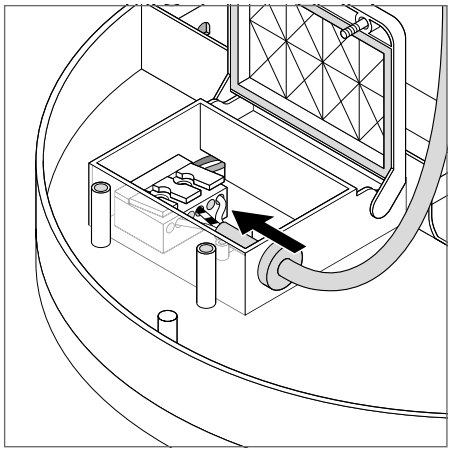

SF COMPACT IK10 300 24 W 4000 K
IP65 WT

The pictures shown in the catalog are for illustration purposes only. For information on size and color, please refer to the product table.

SURFACE COMPACT IK10

Wall and ceiling luminaire with high impact resistance

PERFOR-MANCE CLASS

FLICKER VALUE <5%

CRI >80

IP65

LEDVANCE 5 year guarantee [1]

Product name	EAN (GTIN)	El.nr.	Replacement for	W	lm	lm/W	K	L70 [2]	∠°	IK	L × W × H [mm] Ø × H [mm]
SF COMPACT IK10 300 24 W 3000 K IP65 WT	4058075**062207**	**3206972**	2 × 18 W CFLP	24	1800	75	3000	50000	120	IK10	300 × 61
SF COMPACT IK10 300 24 W 4000 K IP65 WT	4058075**062221**	**3206973**	2 × 18 W CFLP	24	1920	80	4000	50000	120	IK10	300 × 61

[1] Refer to www.ledvance.com/guarantee for precise conditions
[2] t[h]: L70 / B50 @ 25 °C (T_a) / t[h]: L80 / B10 @ 25 °C (T_a)

SURFACE CIRCULAR

Classic shaped wall and ceiling luminaires

PRODUCT FEATURES

- Luminaire versions available with and without high-frequency sensor, DALI-2 technology or selectable CCT
- Type of protection: IP44 (ceiling mounting), IP20 (wall mounting)
- Metal housing, PMMA cover
- Ambient temperature in operation: –20…+40 °C
- Indoor use only, not suitable for outdoor use

PRODUCT BENEFITS

- Versions with sensor: easy adjustment of the sensor range, daylight detection and illumination time
- Energy savings of up to 55 % compared to luminaires that use CFL
- Easy and quick installation
- Very homogenous light

AREAS OF APPLICATION

- Corridors
- Stairways
- Bathrooms
- Foyers

EQUIPMENT / ACCESSORIES

- Replaceable cover optionally available

FURTHER PRODUCT DETAILS

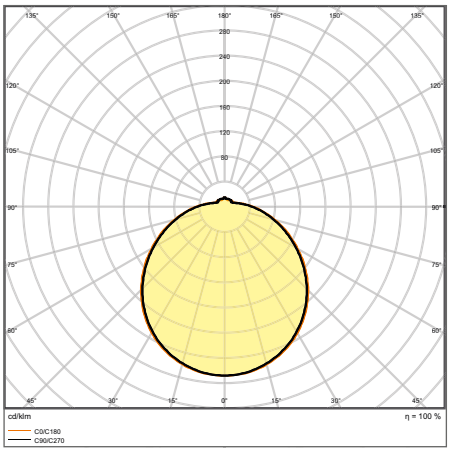

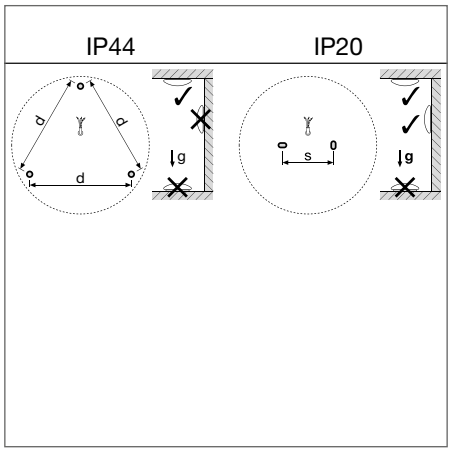

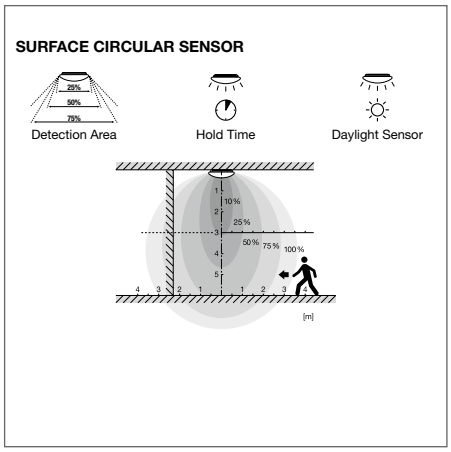

SF CIRCULAR 400 S 24 W 3000 K IP44 WT

The pictures shown in the catalog are for illustration purposes only. For information on size and color, please refer to the product table.

SURFACE CIRCULAR

Wall and ceiling luminaire with IP44

VALUE CLASS

FLICKER VALUE <5% | CRI >80 | IP44 | LEDVANCE 3 year guarantee [1]

Product name	EAN (GTIN)	El.nr.	Replacement for	W	lm	lm/W	K	L70 [2]		L × W × H [mm] Ø × H [mm]
SF CIRC 250 V 13 W 830 IP44	4058075**617865**	**3004876**	18 W CFLP	13	920	70	3000	30000	120	250 × 91
SF CIRC 250 V 13 W 840 IP44	4058075**617889**	**3004877**	18 W CFLP	13	960	75	4000	30000	120	250 × 91
SF CIRC 350 V 18 W 830 IP44	4058075**617940**	**3004878**	24 W CFLP	18	1440	80	3000	30000	120	350 × 115
SF CIRC 350 V 18 W 840 IP44	4058075**617964**	**3004879**	24 W CFLP	18	1440	80	4000	30000	120	350 × 115
SF CIRC 400 V 24 W 830 IP44	4058075**618022**	**3004880**	2 × 18 W CFLP	24	1920	80	3000	30000	120	400 × 120
SF CIRC 400 V 24 W 840 IP44T	4058075**618046**	**3004881**	2 × 18 W CFLP	24	1920	80	4000	30000	120	400 × 120

SURFACE CIRCULAR 500 PS

Wall and ceiling luminaire with IP44 and power select (PS)

VALUE CLASS

TÜV Rheinland CERTIFIED – Regular Production Surveillance, Safety, Type Approved – www.tuv.com ID 1111267276

W ▲ ▼ W | FLICKER VALUE <5% | CRI >80 | IP44 | LEDVANCE 5 year guarantee [1]

Product name	EAN (GTIN)	El.nr.	Replacement for	W	lm	lm/W	K	L70 [2]		L × W × H [mm] Ø × H [mm]
SF CIRC 500 V 42W 830 IP44 PS	4099854**042119**	**3316057**	2 × 32 W CFLP	42/30/19	3500/2500/1500	83/78	3000	50000	120	500 × 105
SF CIRC 500 V 42W 840 IP44 PS	4099854**042133**	**3316058**	2 × 32 W CFLP	42/30/19	3500/2500/1500	83/78	4000	50000	120	500 × 105

SURFACE CIRCULAR 500 DALI

Wall and ceiling luminaire with IP44 and DALI-2 technology

VALUE CLASS

VIVA RES | TÜV Rheinland CERTIFIED – Regular Production Surveillance, Safety, Type Approved – www.tuv.com ID 1111267276

FLICKER VALUE <5% | CRI >80 | IP44 | LEDVANCE 5 year guarantee [1]

Product name	EAN (GTIN)	El.nr.	Replacement for	W	lm	lm/W	K	L70 [2]			L × W × H [mm] Ø × H [mm]
SF CIRC 500 V 42W 830 IP44 DALI	4099854**077890**	**3310306**	2 × 32 W CFLP	42	3500	83	3000	50000	120	DALI-2	500 × 105
SF CIRC 500 V 42W 840 IP44 DALI	4099854**077913**	**3310307**	2 × 32 W CFLP	42	3500	83	4000	50000	120	DALI-2	500 × 105

[1] Refer to www.ledvance.com/guarantee for precise conditions
[2] t[h]: L70/B50 @ 25 °C (T_a)/t[h]: L80/B10 @ 25 °C (T_a)

SURFACE CIRCULAR SENSOR

Wall and ceiling luminaire with IP44 and high frequency sensor

VALUE CLASS

FLICKER VALUE <5%

CRI >80

IP44

LEDVANCE 3 year guarantee [1]

Product name	EAN (GTIN)	El.nr.	Replacement for	W	lm	lm/W	K	L70 [2]	°	L × W × H [mm] Ø × H [mm]
SF CIRC 250 SEN V 13 W 830 IP44	4058075**617902**	**3004870**	18 W CFLP	13	920	70	3000	30000	120	250 × 91
SF CIRC 250 SEN V 13 W 840 IP44	4058075**617926**	**3004871**	18 W CFLP	13	960	75	4000	30000	120	250 × 91
SF CIRC 350 SEN V 18 W 830 IP44	4058075**617988**	**3004872**	26 W CFLP	18	1440	80	3000	30000	120	350 × 115
SF CIRC 350 SEN V 18 W 840 IP44	4058075**618008**	**3004873**	26 W CFLP	18	1440	80	4000	30000	120	350 × 115
SF CIRC 400 SEN V 24 W 830 IP44	4058075**618084**	**3004874**	32 W CFLP	24	1920	80	3000	30000	120	400 × 120
SF CIRC 400 SEN V 24 W 840 IP44	4058075**618121**	**3004875**	32 W CFLP	24	1920	80	4000	30000	120	400 × 120

SENSOR PROPERTIES

Product name	Type of sensor	Sensor technology	Detection threshold of daylight sensor	Detection range of motion sensor	Sensor detection angle	Sensor controlled switching time
SURFACE CIRCULAR 250 SENSOR	Motion/Light	Microwave	25 lx	8 m	110 °	5 s/1 min/3 min/10 min
SURFACE CIRCULAR 350 SENSOR	Motion/Light	Microwave	25 lx	8 m	110 °	5 s/1 min/3 min/10 min
SURFACE CIRCULAR 400 SENSOR	Motion/Light	Microwave	25 lx	8 m	110 °	5 s/1 min/3 min/10 min

SURFACE CIRCULAR 500 SENSOR PS

Wall and ceiling luminaire with IP44, high frequency sensor and power select (PS)

VALUE CLASS

TÜVRheinland CERTIFIED — Regular Production Surveillance Safety Type Approved — www.tuv.com ID 1111267276

W ▲ W

FLICKER VALUE <5%

CRI >80

IP44

LEDVANCE 5 year guarantee [1]

Product name	EAN (GTIN)	El.nr.	Replacement for	W	lm	lm/W	K	L70 [2]	°	L × W × H [mm] Ø × H [mm]
SF CIRC 500 SEN V 42W 830 IP44 PS	4099854**042157**	**3316059**	2 × 32 W CFLP	42/30/19	3500/2500/1500	83/78	3000	50000	120	500 × 105
SF CIRC 500 SEN V 42W 840 IP44 PS	4099854**042171**	**3316060**	2 × 32 W CFLP	42/30/19	3500/2500/1500	83/78	4000	50000	120	500 × 105

SENSOR PROPERTIES

Product name	Type of sensor	Sensor technology	Detection threshold of daylight sensor	Detection range of motion sensor	Sensor detection angle	Sensor controlled switching time
SURFACE CIRCULAR 500 SENSOR PS	Motion/Light	Microwave	2…50 lx	4…7 m	120 °	5 s…30 min

[1] Refer to www.ledvance.com/guarantee for precise conditions
[2] t[h]: L70/B50 @ 25 °C (T_a)/t[h]: L80/B10 @ 25 °C (T_a)

SURFACE CIRCULAR 350 3CCT

Wall and ceiling luminaire with IP44 and selectable CCT

VALUE CLASS

TÜVRheinland CERTIFIED — Regular Production Surveillance Safety Type Approved — www.tuv.com ID 1111267276

CCT | FLICKER VALUE <5% | CRI >80 | IP44 | LEDVANCE 5 year guarantee [1]

Product name	EAN (GTIN)	El.nr.	Replacement for	W	lm	lm/W	K	L70 [2]	°	L × W × H [mm] Ø × H [mm]
SF CIRC 350 V 18W 3CCT IP44	4099854**042072**	**3310308**	1 × 26 W CFLP	18	1440	80	3000/4000/5000	50000	120	350 × 75

SURFACE CIRCULAR 350 3CCT SENSOR

Wall and ceiling luminaire with IP44, high frequency sensor and selectable CCT

VALUE CLASS

TÜVRheinland CERTIFIED — Regular Production Surveillance Safety Type Approved — www.tuv.com ID 1111267276

CCT | FLICKER VALUE <5% | CRI >80 | IP44 | LEDVANCE 5 year guarantee [1]

Product name	EAN (GTIN)	El.nr.	Replacement for	W	lm	lm/W	K	L70 [2]	°	L × W × H [mm] Ø × H [mm]
SF CIRC 350 SEN V 18W 3CCT IP44	4099854**042096**	**3310309**	1 × 26 W CFLP	18	1440	80	3000/4000/5000	50000	120	350 × 75

SENSOR PROPERTIES

Product name	Type of sensor	Sensor technology	Detection threshold of daylight sensor	Detection range of motion sensor	Sensor detection angle	Sensor controlled switching time
SURFACE CIRCULAR 350 3CCT SENSOR	Motion/Light	Microwave	2…50 lx	4…7 m	120 °	5 s…30 min

[1] Refer to www.ledvance.com/guarantee for precise conditions
[2] t[h]: L70/B50 @ 25 °C (T_a)/t[h]: L80/B10 @ 25 °C (T_a)

SURFACE CIRCULAR ACCESSORIES

Replacement components and extensions

1

2

3

2

3

COVER

- Easy replacement of the cover without changing the luminaire
- Opal cover made of PMMA
- Impact resistance: IK03
- Replacement for SURFACE CIRCULAR 350 3CCT covers

FRAME

- Extension for SURFACE CIRCULAR 500
- Design extension for a more decorative appearance
- Allows direct light as well as accentuated light to the ceiling
- Easy and quick installation

	Product name	EAN (GTIN)	El.nr.	L × W × H [mm] Ø × H [mm]	MATERIAL	COLOR			No.
	SF CIRCULAR 250 COVER	4058075**156722**	**3000694**	250 × 80	Polymethylmethacrylate (PMMA) / Polymethyl methacrylate (PMMA)	White	120	1	1
	SF CIRCULAR 350 COVER	4058075**156807**	**3000695**	350 × 104	Polymethylmethacrylate (PMMA) / Polymethyl methacrylate (PMMA)	White	120	1	1
	SF CIRCULAR 350 3CCT COVER	4099854**064357**	**3310310**	350 × 65	Polymethylmethacrylate (PMMA)	White	120	1	1
	SF CIRCULAR 400 COVER	4058075**156821**	**3000697**	400 × 112	Polymethylmethacrylate (PMMA) / Polymethyl methacrylate (PMMA)	White	120	1	1
	SF CIRCULAR 500 COVER	4099854**064395**	**3316061**	500 × 105	Polymethylmethacrylate (PMMA)	White	120	1	1
NEW	SF CIRCULAR 500 FRAME WT	4058075**834187**	**3361427**	560 × 105	Steel	White	120	1	2
NEW	SF CIRCULAR 500 FRAME BK	4058075**834200**	**3361428**	560 × 105	Steel	Black	120	1	3

The pictures shown in the catalog are for illustration purposes only. For information on size and color, please refer to the product table.

SURFACE SQUARE

Square shaped wall and ceiling luminaires

PRODUCT FEATURES

- Luminaire versions available with and without high frequency sensor and selectable CCT
- Type of protection: IP44 (ceiling mounting), IP20 (wall mounting)
- Metal housing, PMMA cover
- Ambient temperature in operation: –20…+40 °C
- Indoor use only, not suitable for outdoor use

PRODUCT BENEFITS

- Indoor luminaire with high luminous efficacy
- Energy savings of up to 55 % compared to luminaires that use CFL
- Easy and quick installation
- Very homogenous light

AREAS OF APPLICATION

- Corridors
- Stairways
- Bathrooms
- Foyers

EQUIPMENT / ACCESSORIES

- Replacement cover optionally available

FURTHER PRODUCT DETAILS

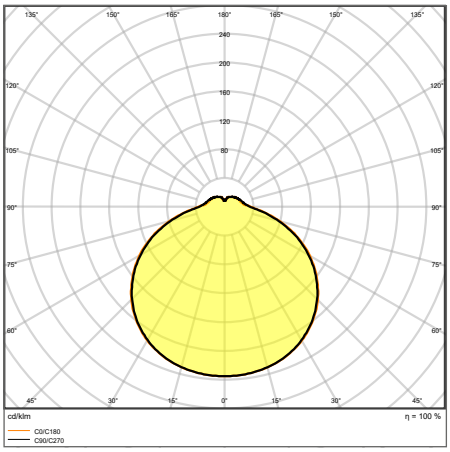

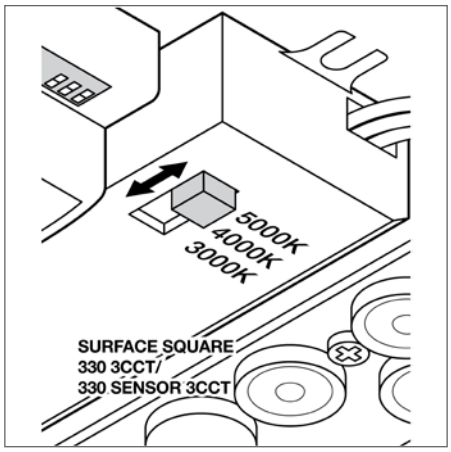

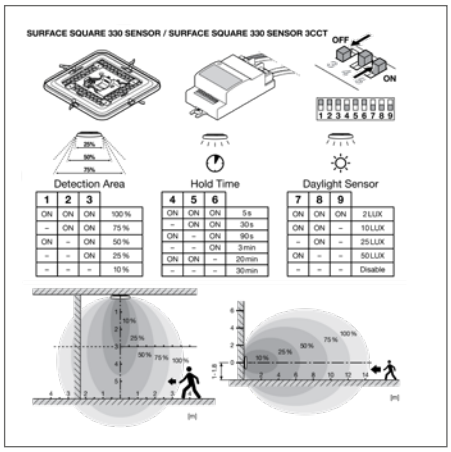

SF SQUARE 330 V 24W 830 IP44

The pictures shown in the catalog are for illustration purposes only. For information on size and color, please refer to the product table.

SURFACE SQUARE 330

Wall and ceiling luminaire with IP44

VALUE CLASS

FLICKER VALUE <5% | CRI >80 | IP44 | LEDVANCE 3 year guarantee [1]

Product name	EAN (GTIN)	El.nr.	Replacement for	W	lm	lm/W	K	L70 [2]		L × W × H [mm] Ø × H [mm]
SF SQUARE 330 V 24W 830 IP44	4099854**041952**	**3310299**	1 × 26 W CFLP	24	2000	83	3000	35000	120	330 × 330 × 75
SF SQUARE 330 V 24W 840 IP44	4099854**041976**	**3310300**	1 × 26 W CFLP	24	2000	83	4000	35000	120	330 × 330 × 75

SURFACE SQUARE 330 SENSOR

Wall and ceiling luminaire with IP44 and high frequency sensor

VALUE CLASS

FLICKER VALUE <5% | CRI >80 | IP44 | LEDVANCE 3 year guarantee [1]

Product name	EAN (GTIN)	El.nr.	Replacement for	W	lm	lm/W	K	L70 [2]		L × W × H [mm] Ø × H [mm]
SF SQUARE 330 SEN V 24W 830 IP44	4099854**041990**	**3310301**	1 × 26 W CFLP	24	2000	83	3000	35000	120	330 × 330 × 75
SF SQUARE 330 SEN V 24W 840 IP44	4099854**042010**	**3310302**	1 × 26 W CFLP	24	2000	83	4000	35000	120	330 × 330 × 75

SENSOR PROPERTIES

Product name	Type of sensor	Sensor technology	Detection threshold of daylight sensor	Detection range of motion sensor	Sensor detection angle	Sensor controlled switching time
SF SQUARE 330 SEN V 24W 830 IP44	Motion/Light	Microwave	2…50 lx	4…7 m	120 °	5 s…30 min
SF SQUARE 330 SEN V 24W 840 IP44	Motion/Light	Microwave	2…50 lx	4…7 m	120 °	5 s…30 min

SURFACE SQUARE 330 3CCT

Wall and ceiling luminaire with IP44 and selectable CCT

VALUE CLASS

CCT | FLICKER VALUE <5% | CRI >80 | IP44 | LEDVANCE 5 year guarantee [1]

Product name	EAN (GTIN)	El.nr.	Replacement for	W	lm	lm/W	K	L70 [2]		L × W × H [mm] Ø × H [mm]
SF SQUARE 330 V 24W 3CCT IP44	4099854**042034**	**3310303**	1 × 26 W CFLP	24	2000	83	3000/4000/5000	50000	120	330 × 330 × 75

[1] Refer to www.ledvance.com/guarantee for precise conditions
[2] t[h]: L70/B50 @ 25 °C (T_a)/t[h]: L80/B10 @ 25 °C (T_a)

SURFACE SQUARE 330 3CCT SENSOR

Wall and ceiling luminaire with IP44, high frequency sensor and selectable CCT

VALUE CLASS

CCT | FLICKER VALUE <5% | CRI >80 | IP44 | LEDVANCE 5 year guarantee [1]

Product name	EAN (GTIN)	El.nr.	Replacement for	W	lm	lm/W	K	L70 [2]	°	L × W × H [mm] Ø × H [mm]
SF SQUARE 330 SEN V 24W 3CCT IP44	4099854**042058**	**3310304**	1 × 26 W CFLP	24	2000	83	3000/4000/5000	50000	120	330 × 330 × 75

SENSOR PROPERTIES

Product name	Type of sensor	Sensor technology	Detection threshold of daylight sensor	Detection range of motion sensor	Sensor detection angle	Sensor controlled switching time
SF SQUARE 330 SEN V 24W 3CCT IP44	Motion/Light	Microwave	2…50 lx	4…7 m	120 °	5 s…30 min

[1] Refer to www.ledvance.com/guarantee for precise conditions
[2] t[h]: L70/B50 @ 25 °C (T_a)/t[h]: L80/B10 @ 25 °C (T_a)

SURFACE SQUARE COVER

Replacement cover for Surface Square

PRODUCT FEATURES

- Easy replacement of the cover without changing the luminaire
- Opal cover made of PMMA
- Impact resistance: IK03

AREAS OF APPLICATION

- Replacement for SURFACE SQUARE 330 covers

LEDVANCE 2 year guarantee [1]

Product name	EAN (GTIN)	El.nr.	L × W × H [mm] Ø × H [mm]	MATERIAL	COLOR		
SF SQUARE 330 COVER	4099854**064432**	**3310305**	330 × 330 × 600	Polymethylmethacrylate (PMMA)	White	120	1

[1] Refer to www.ledvance.com/guarantee for precise conditions
The pictures shown in the catalog are for illustration purposes only. For information on size and color, please refer to the product table.

SURFACE BULKHEAD

Robust wall and ceiling luminaire for indoor or outdoor use

1*

2*

3*

PRODUCT FEATURES

- Housing and cover made of UV-resistant PC
- Available in 2 diameters, 2 housing colors and 2 light colors
- Always order cover separately
- Versions: ring or eyelid cover
- Impact resistance: IK10
- Type of protection: IP65

PRODUCT BENEFITS

- Extremely versatile through switchable, HF-sensor and 3h single-battery versions
- Suitable for use in public areas thanks to high IK rating
- Easy installation on wall and ceiling with through-wiring option
- High luminous efficacy in normal operation
- All versions with 5-year guarantee, except emergency version: 3 years (built-in 3h battery)

AREAS OF APPLICATION

- Direct replacement for luminaires with fluorescent lamps
- Corridors, stairways, entrance areas
- Passages, underpasses
- Public areas

EQUIPMENT / ACCESSORIES

- Additional cover rings in different designs available as an optional accessory
- Mounting screws and dowels included

FURTHER PRODUCT DETAILS

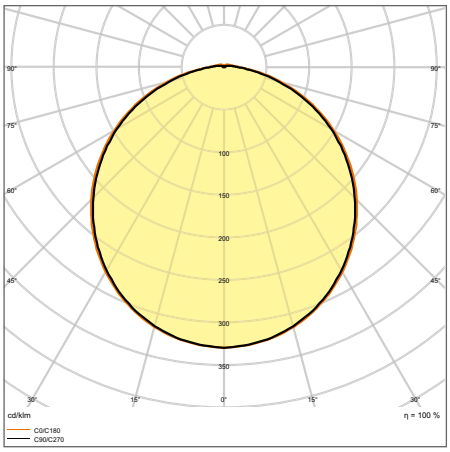

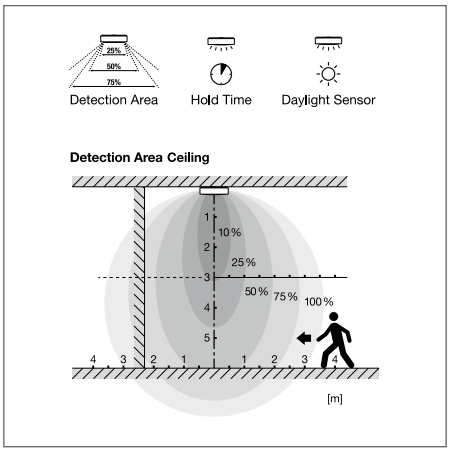

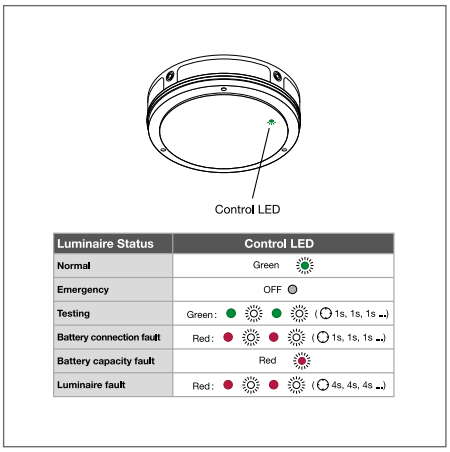

Luminaire Status	Control LED
Normal	Green
Emergency	OFF
Testing	Green: (1s, 1s, 1s)
Battery connection fault	Red: (1s, 1s, 1s)
Battery capacity fault	Red
Luminaire fault	Red: (4s, 4s, 4s)

SF BLKH 250 10W/3000K WT IP65

*All pictures show the luminaire with the accessory: SF BLKH RING. The accessory must be ordered separately.
The pictures shown in the catalog are for illustration purposes only. For information on size and color, please refer to the product table.

SURFACE BULKHEAD ON/OFF

Robust wall and ceiling luminaire with IP65 protection

PERFOR-MANCE CLASS

FLICKER VALUE <5% | CRI >80 | IP65 | LEDVANCE 5 year guarantee [1]

Product name	EAN (GTIN)	El.nr.	Replacement for	W	lm	lm/W	K	L70 [2]	°	IK	L × W × H [mm] Ø × H [mm]	No.
SF BLKH 250 10W/3000K WT IP65	4058075**647145**	**3004838**	1 × 16 W CFL	10	800	80	3000	50000	120	IK10	250 × 70	3
SF BLKH 250 10W/4000K WT IP65	4058075**647169**	**3004839**	1 × 16 W CFL	10	800	80	4000	50000	120	IK10	250 × 70	3
SF BLKH 250 10W/3000K BK IP65	4058075**647183**	**3004840**	1 × 16 W CFL	10	800	80	3000	50000	120	IK10	250 × 70	1
SF BLKH 250 10W/4000K BK IP65	4058075**647206**	**3004841**	1 × 16 W CFL	10	800	80	4000	50000	120	IK10	250 × 70	1
SF BLKH 300 15W/3000K WT IP65	4058075**647466**	**3004854**	1 × 28 W CFL	15	1400	93	3000	50000	120	IK10	300 × 70	3
SF BLKH 300 15W/4000K WT IP65	4058075**647480**	**3004855**	1 × 28 W CFL	15	1400	93	4000	50000	120	IK10	300 × 70	3
SF BLKH 300 15W/3000K BK IP65	4058075**647503**	**3004856**	1 × 28 W CFL	15	1400	93	3000	50000	120	IK10	300 × 70	1
SF BLKH 300 15W/4000K BK IP65	4058075**647527**	**3004857**	1 × 28 W CFL	15	1400	93	4000	50000	120	IK10	300 × 70	1

SURFACE BULKHEAD SENSOR

Robust wall and ceiling luminaire with IP65 protection and high-frequency sensor

PERFOR-MANCE CLASS

FLICKER VALUE <5% | CRI >80 | IP65 | LEDVANCE 5 year guarantee [1]

Product name	EAN (GTIN)	El.nr.	Replacement for	W	lm	lm/W	K	L70 [2]	°	IK	L × W × H [mm] Ø × H [mm]	No.
SF BLKH 250 S 10W/3000K WT IP65	4058075**647220**	**3004842**	1 × 16 W CFL	10	800	80	3000	50000	120	IK10	250 × 70	3
SF BLKH 250 S 10W/4000K WT IP65	4058075**647244**	**3004843**	1 × 16 W CFL	10	800	80	4000	50000	120	IK10	250 × 70	3
SF BLKH 250 S 10W/3000K BK IP65	4058075**647268**	**3004844**	1 × 16 W CFL	10	800	80	3000	50000	120	IK10	250 × 70	1
SF BLKH 250 S 10W/4000K BK IP65	4058075**647282**	**3004845**	1 × 16 W CFL	10	800	80	4000	50000	120	IK10	250 × 70	1
SF BLKH 300 S 15W/3000K WT IP65	4058075**647541**	**3004858**	1 × 28 W CFL	15	1400	93	3000	50000	120	IK10	300 × 70	3
SF BLKH 300 S 15W/4000K WT IP65	4058075**647565**	**3004859**	1 × 28 W CFL	15	1400	93	4000	50000	120	IK10	300 × 70	3
SF BLKH 300 S 15W/3000K BK IP65	4058075**647589**	**3004860**	1 × 28 W CFL	15	1400	93	3000	50000	120	IK10	300 × 70	1
SF BLKH 300 S 15W/4000K BK IP65	4058075**647602**	**3004861**	1 × 28 W CFL	15	1400	93	4000	50000	120	IK10	300 × 70	1

SURFACE BULKHEAD EMERGENCY

Robust wall and ceiling luminaire with IP65 protection and integrated emergency lighting function

PERFOR-MANCE CLASS

FLICKER VALUE <5% | CRI >80 | IP65 | LEDVANCE 3 year guarantee [1]

Product name	EAN (GTIN)	El.nr.	Replacement for	W	lm	lm/W	K	L70 [2]	°	IK	L × W × H [mm] Ø × H [mm]	No.
SF BLKH 250 EM 10 W 3000 K WT IP65	4058075**647305**	**3004846**	1 × 16 W CFL	10	800	80	3000	50000	120	IK10	250 × 70	3
SF BLKH 250 EM 10 W 4000 K WT IP65	4058075**647329**	**3004847**	1 × 16 W CFL	10	800	80	4000	50000	120	IK10	250 × 70	3
SF BLKH 250 EM 10 W 3000 K BK IP65	4058075**647343**	**3004848**	1 × 16 W CFL	10	800	80	3000	50000	120	IK10	250 × 70	1
SF BLKH 250 EM 10 W 4000 K BK IP65	4058075**647367**	**3004849**	1 × 16 W CFL	10	800	80	4000	50000	120	IK10	250 × 70	1
SF BLKH 300 EM 15 W 3000 K WT IP65	4058075**647626**	**3004862**	1 × 28 W CFL	15	1400	93	3000	50000	120	IK10	300 × 70	3
SF BLKH 300 EM 15 W 4000 K WT IP65	4058075**647640**	**3004863**	1 × 28 W CFL	15	1400	93	4000	50000	120	IK10	300 × 70	3
SF BLKH 300 EM 15 W 3000 K BK IP65	4058075**647664**	**3004864**	1 × 28 W CFL	15	1400	93	3000	50000	120	IK10	300 × 70	1
SF BLKH 300 EM 15 W 4000 K BK IP65	4058075**647688**	**3004865**	1 × 28 W CFL	15	1400	93	4000	50000	120	IK10	300 × 70	1

[1] Refer to www.ledvance.com/guarantee for precise conditions
[2] t[h]: L70/B50 @ 25 °C (T_a)/t[h]: L80/B10 @ 25 °C (T_a)

SURFACE BULKHEAD SENSOR EMERGENCY

Robust wall and ceiling luminaire with IP65 protection, high-frequency sensor and integrated emergency lighting function

PERFOR-MANCE CLASS

FLICKER VALUE <5%

CRI >80

IP65

LEDVANCE 3 year guarantee [1]

Product name	EAN (GTIN)	El.nr.	Replacement for	W	lm	lm/W	K	L70 [2]	°	IK	L × W × H [mm] Ø × H [mm]	No.
SF BLKH 250 S EM 10W/3000K WT IP65	4058075**647381**	**3004850**	1 × 16 W CFL	12	800	80	3000	50000	120	IK10	258 × 70	3
SF BLKH 250 S EM 10W/4000K WT IP65	4058075**647404**	**3004851**	1 × 16 W CFL	12	800	80	4000	50000	120	IK10	258 × 70	3
SF BLKH 250 S EM 10W/3000K BK IP65	4058075**647428**	**3004852**	1 × 16 W CFL	12	800	80	3000	50000	120	IK10	258 × 70	1
SF BLKH 250 S EM 10W/4000K BK IP65	4058075**647442**	**3004853**	1 × 16 W CFL	12	800	80	4000	50000	120	IK10	258 × 70	1
SF BLKH 300 S EM 15W/3000K WT IP65	4058075**647701**	**3004866**	1 × 28 W CFL	17	1400	93	3000	50000	120	IK10	308 × 70	3
SF BLKH 300 S EM 15W/4000K WT IP65	4058075**647725**	**3004867**	1 × 28 W CFL	17	1400	93	4000	50000	120	IK10	308 × 70	3
SF BLKH 300 S EM 15W/3000K BK IP65	4058075**647749**	**3004868**	1 × 28 W CFL	17	1400	93	3000	50000	120	IK10	308 × 70	1
SF BLKH 300 S EM 15W/4000K BK IP65	4058075**647763**	**3004869**	1 × 28 W CFL	17	1400	93	4000	50000	120	IK10	308 × 70	1

SENSOR PROPERTIES

Product name	Type of sensor	Sensor technology	Detection threshold of daylight sensor	Detection range of motion sensor	Sensor detection angle	Sensor controlled switching time
SURFACE BULKHEAD 250 SENSOR	Motion/Light	Microwave	25 lx	8 m	110 °	5 s/30 s/90 s/3 min/20 min/30 min
SURFACE BULKHEAD 300 SENSOR	Motion/Light	Microwave	25 lx	8 m	110 °	5 s/30 s/90 s/3 min/20 min/30 min
SURFACE BULKHEAD 250 SENSOR EMERGENCY	Motion/Light	Microwave	25 lx	8 m	110 °	5 s/30 s/90 s/3 min/20 min/30 min
SURFACE BULKHEAD 300 SENSOR EMERGENCY	Motion/Light	Microwave	25 lx	8 m	110 °	5 s/30 s/90 s/3 min/20 min/30 min

EMERGENCY LIGHTING PROPERTIES

Product name	Battery life in emergency operation mode	Type of emergency operation test	Type of emergency light operation	Luminous flux in emergency operation mode	Type of Battery
SF BLKH 250 EM 10 W 3000 K WT IP65	3 h	Automatic	Maintained/Non-maintained	300 lm	LiFePO4
SF BLKH 250 EM 10 W 4000 K WT IP65	3 h	Automatic	Maintained/Non-maintained	300 lm	LiFePO4
SF BLKH 250 EM 10 W 3000 K BK IP65	3 h	Automatic	Maintained/Non-maintained	300 lm	LiFePO4
SF BLKH 250 EM 10 W 4000 K BK IP65	3 h	Automatic	Maintained/Non-maintained	300 lm	LiFePO4
SF BLKH 300 EM 15 W 3000 K WT IP65	3 h	Automatic	Maintained/Non-maintained	300 lm	LiFePO4
SF BLKH 300 EM 15 W 4000 K WT IP65	3 h	Automatic	Maintained/Non-maintained	300 lm	LiFePO4
SF BLKH 300 EM 15 W 3000 K BK IP65	3 h	Automatic	Maintained/Non-maintained	300 lm	LiFePO4
SF BLKH 300 EM 15 W 4000 K BK IP65	3 h	Automatic	Maintained/Non-maintained	300 lm	LiFePO4
SF BLKH 250 S EM 10W/3000K WT IP65	3 h	Automatic	Maintained/Non-maintained	300 lm	LiFePO4
SF BLKH 250 S EM 10W/4000K WT IP65	3 h	Automatic	Maintained/Non-maintained	300 lm	LiFePO4
SF BLKH 250 S EM 10W/3000K BK IP65	3 h	Automatic	Maintained/Non-maintained	300 lm	LiFePO4
SF BLKH 250 S EM 10W/4000K BK IP65	3 h	Automatic	Maintained/Non-maintained	300 lm	LiFePO4
SF BLKH 300 S EM 15W/3000K WT IP65	3 h	Automatic	Maintained/Non-maintained	300 lm	LiFePO4
SF BLKH 300 S EM 15W/4000K WT IP65	3 h	Automatic	Maintained/Non-maintained	300 lm	LiFePO4
SF BLKH 300 S EM 15W/3000K BK IP65	3 h	Automatic	Maintained/Non-maintained	300 lm	LiFePO4
SF BLKH 300 S EM 15W/4000K BK IP65	3 h	Automatic	Maintained/Non-maintained	300 lm	LiFePO4

[1] Refer to www.ledvance.com/guarantee for precise conditions
[2] t[h]: L70/B50 @ 25 °C (T_a)/t[h]: L80/B10 @ 25 °C (T_a)

SURFACE BULKHEAD ACCESSORIES

Recommended equipment for Surface Bulkhead

1

2

3

4

PRODUCT FEATURES

- Wide range of applications thanks to a large variety of versions
- PC cover in white or black
- As a ring or with eyelid cover
- Anti-theft screw (Torx) included

EQUIPMENT / ACCESSORIES

- Anti-theft screw included

SURFACE BULKHEAD RING

Attachable cover ring (IK10)

LEDVANCE 2 year guarantee [1]

Product name	EAN (GTIN)	El.nr.	L × W × H [mm] Ø × H [mm]	MATERIAL	COLOR		No.
SF BLKH RING 250 WT	4058075**399334**	**3001035**	258 × 57	Polycarbonate (PC)	White	1	1
SF BLKH RING 250 BK	4058075**399358**	**3001036**	258 × 57	Polycarbonate (PC)	Black	1	2
SF BLKH RING 300 WT	4058075**399372**	**3001037**	308 × 57	Polycarbonate (PC)	White	1	1
SF BLKH RING 300 BK	4058075**399396**	**3001008**	308 × 57	Polycarbonate (PC)	Black	1	2

SURFACE BULKHEAD EYELID

Attachable half-visor ring (IK10)

LEDVANCE 2 year guarantee [1]

Product name	EAN (GTIN)	El.nr.	L × W × H [mm] Ø × H [mm]	MATERIAL	COLOR		No.
SF BLKH EYELID 250 WT	4058075**375482**	**3001009**	258 × 64	Polycarbonate (PC) / Polycarbonate (PC)	White	1	3
SF BLKH EYELID 250 BK	4058075**375505**	**3001010**	258 × 64	Polycarbonate (PC) / Polycarbonate (PC)	Black	1	4
SF BLKH EYELID 300 WT	4058075**375529**	**3001011**	308 × 65	Polycarbonate (PC) / Polycarbonate (PC)	White	1	3
SF BLKH EYELID 300 BK	4058075**375543**	**3001012**	308 × 65	Polycarbonate (PC) / Polycarbonate (PC)	Black	1	4

[1] Refer to www.ledvance.com/guarantee for precise conditions

PANEL LUMINAIRES

SUITABLE FOR EVERY NEED: OUR FUNCTIONAL PANELS

SUPERIOR CLASS

1. PANEL TUNABLE WHITE/BIOLUX
Page 92

Individual tunable white color selection combined with high lighting quality

PERFOR-MANCE CLASS

2. PANEL INDIVILED
Page 96

The panel luminaire for perfectionists: perfect lighting and SCALE design

PERFOR-MANCE CLASS

3. PANEL PROTECT
Page 98

The panel for heavy duty: IP54 protection and other resistance features

PERFOR-MANCE CLASS

4. PANEL COMFORT
Page 102

Highly efficient and versatile panel for everyday application

VALUE CLASS

5. PANEL COMPACT
Page 108

The panel luminaire for everyday applications and convenient installation

6. PANEL ACCESSORIES
Page 112

Versatile mounting options

SETTING THE LIGHT INTENSITY

The new ON/OFF versions of the PANEL COMFORT CRI 80 feature a Power Select (PS) function. Via a conveniently accessible switch on the top of the driver, the luminous intensity (lm) can be individually adjusted in three steps to the ceiling height for optimum illumination. Any drop in light over time can also be compensated for via the PS switch.

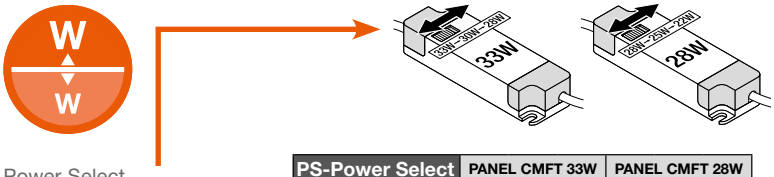

Power Select switch for setting the the light intensity

PS-Power Select	PANEL CMFT 33W			PANEL CMFT 28W		
W AC	33	30	28	28	25	22
lm	4320	3900	3640	3640	3250	2900

Light intensity according to ceiling height

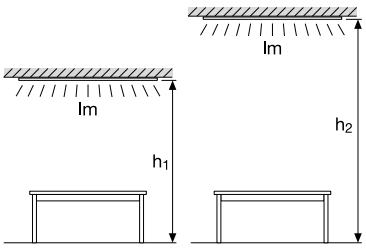

THE MOST IMPORTANT SPECIFICATIONS AT A GLANCE

	Product-family	Specifications	Guarantee[1]	Included installation accessories	Available versions	Grid size
1	PANEL BIOLUX HCL TW	Light color range: 2700–6500K Up to 115 lm/W Up to 4600 lm CRI 90, SDCM 3, UGR < 19 Up to 70000 h (L70/B50@25 °C)	5 years	External driver with twist-lock connector. Pre-mounted cable clamp for through-wiring Security kit (only DALI versions) PL625 CSW with pre-mounted Wago connector	IoT-ready DALI and Zigbee versions	600 × 600 625 × 625 1200 × 300
2	PANEL INDIVILED	Up to 120 lm/W 60000 h (L80/B10@25 °C) SDCM 3, UGR < 16 IP40/IK08 TP(A) fire rated (for UK)	5 years	External driver with twist-lock connector 4 × security & suspension brackets 1 × Security wire. For DALI types: 5-pole connector box for toolless installation and through-wiring	ON/OFF (non-dimmable) IoT-ready DALI/ Zigbee versions EM	600 × 600 625 × 625
3	PANEL PROTECT	140 lm/W 70000 h (L80/B10@25 °C) 50000 h (L90/B10@25 °C) 5040 lm and Power Select (PS-4 steps) SDCM 3, UGR < 22/UGR < 19 IP54 frontside/IP20 backside Central battery ready (EL) Overall height only 34 mm (incl. driver)	5 years	External driver with twist-lock connector 4 × security & suspension brackets 1 × Security wire (600 versions) 5-pole connector box for toolless installation and through-wiring Special H50 Surface Mount Frames available separately (lower profile)	ON/OFF (non-dimmable) IoT-ready DALI All versions central battery system ready (EL) 3000/4000 K versions Suitable with EM conversion box Implementation of 3rd party optical sensor possible via CCE request	600 × 600 625 × 625
4	PANEL COMFORT	Up to 130 lm/W Up to 70000 h (L80/B10@25 °C) Power Select on driver (PS–3 Step) CRI 90 additionally with CCT select (CPS) SDCM 3 UGR < 22/UGR < 19 versions	5 years	External driver with twist-lock connector Switch on top of the driver to select Power (and CCT for CRI 90) 4 × security & suspension brackets Security wire with 600/1200 versions Optimized suspension features for 1200 version 5-pole connector box for toolless installation and through-wiring	ON/OFF with Power Select (PS)/CRI 90 + CCT select (CPS)/non dimmable IoT-ready DALI/Zigbee versions DALI versions EM ready for central battery systems (EL) CRI 90 versions available 3000/4000/6500 K versions Suitable with EM conversion box	600 × 600 625 × 625 1200 × 300
5	PANEL COMPACT	110 lm/W 50000 h (L80/B50@25 °C) SDCM 5 UGR < 22/UGR < 19 Selected CRI 90 versions	5 years	External driver with twist-lock connector 2 × security brackets Security wire included for 600/1200 versions 3-pole through-wiring on ON/OFF drivers (from 9/23 onwards)	ON/OFF (non-dimmable) DALI (dimmable) DALI versions EM ready for central battery systems (EL) CRI 90 versions available 3000/4000/6500 K versions Suitable with EM conversion box	600 × 600 625 × 625 1200 × 300 1200 × 600

[1] For precise terms and conditions go to www.ledvance.com/guarantee

CLEVER 4-IN-1 SOLUTION

With the ON/OFF versions of PANEL COMFORT CRI 90, the light color can be switched on the driver from 3000 to 4000 K and the luminous flux from 3600 to 4200 lm, thus allowing four possible combinations. The LMS-controlled DALI versions have an external CCT switch for the light color.

	29.5 W	36 W
4000 K	3600 lm	4200 lm
3000 K	3400 lm	4000 lm

On/Off versions with CCT and lumen switch on the driver

DALI versions with external CCT switch

	36 W
4000 K	4200 lm
3000 K	4000 lm

BIOLUX HCL PANEL DALI GEN 2

Recessed panel luminaires, Tunable White, 115 lm/W, tool-free installation, DALI-2 IoT technology

1

2

PRODUCT FEATURES

- IoT-ready luminaire with DALI-2 technology
- Adjustable color temperature via Tunable White: 2 700…6 500 K
- Very high color rendering index Ra: > 90
- High quality extruded aluminum frame
- Version available with pre-mounted Wago-connector (Item No: WAGO 771-9985/206-301) for Panel 625 CSW
- Suitable for central battery emergency installations acc. to EN 60598-2-22

PRODUCT BENEFITS

- Suitable luminaire for VIVARES DALI, VIVARES DALI HCL and other DALI-2 light controls
- Enables an individual Tunable White lighting solution in combination with compatible DALI-2 lighting controls
- Supports LEDVANCE Human Centric Lighting in conjunction with DALI PRO 2 IOT LDVV Controller (4052899627079)
- Compatible with VIVARES CLOUD SERVICE for energy monitoring
- Through-wiring possible with included cable clamp

AREAS OF APPLICATION

- Broad Tunable White CRI90 light color spectrum for high quality Human Centric Lighting applications
- Offices, conference rooms
- Reception areas, foyers, corridors, elevators

EQUIPMENT / ACCESSORIES

- Accessories for several mounting options
- External control gear included
- Security kit (security wire and brackets) included
- Cable clamp for through-wiring preinstalled

FURTHER PRODUCT DETAILS

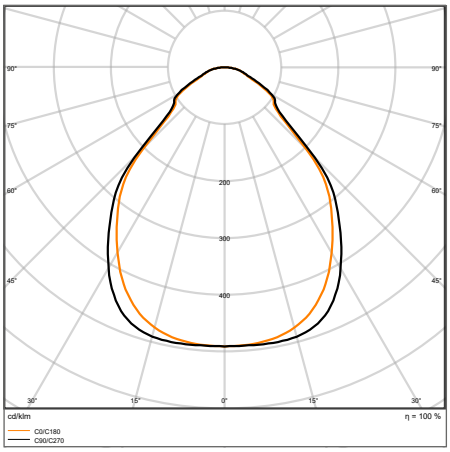

BIOLUX HCL PL 600 S 40W TW DALI

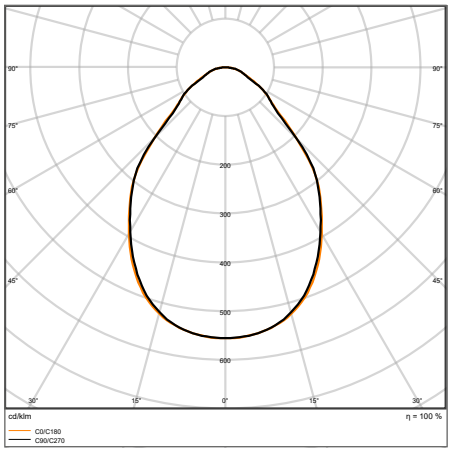

BIOLUX HCL PL 1200 S 40W TW DALI

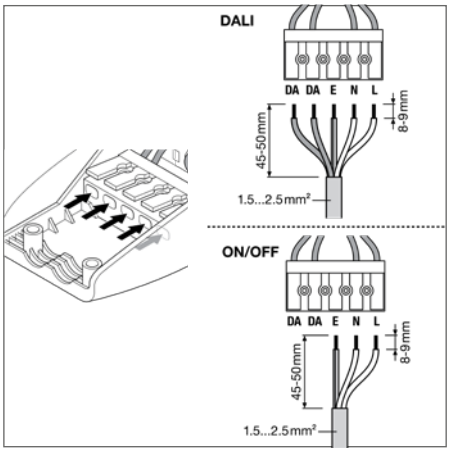

The pictures shown in the catalog are for illustration purposes only. For information on size and color, please refer to the product table.

BIOLUX HCL PANEL DALI GEN 2

Recessed panel luminaires, Tunable White, 115 lm/W, tool-free installation, DALI-2 IoT technology

SUPERIOR CLASS

Product name	EAN (GTIN)	El.nr.	Replacement for	W	lm	lm/W	K	L80 [3]			L × W × H [mm] Ø × H [mm]	No.
BIOLUX HCL PL 600 S 40W TW DALI	4099854**140068**	**3316068**	4 × 18 W/4 × 14 W FL	40	4600	115	2700…6500	40000	90	DALI-2/IoT	595 × 595 × 11	1
BIOLUX HCL PL 625 S 40W TW DALI	4099854**140167**	—	4 × 18 W/4 × 14 W FL	40	4600	115	2700…6500	40000	90	DALI-2/IoT	595 × 595 × 11	1
BIOLUX HCL PL 625 S 40W TW CSW DALI	4099854**140273**	—	4 × 18 W/4 × 14 W FL	40	4600	115	2700…6500	40000	90	DALI-2/IoT	620 × 620 × 11	1
BIOLUX HCL PL 1200 S 40W TW DALI	4099854**140228**	**3316069**	2 × 36 W/3 × 30 W FL	40	4100	102	2700…6500	40000	90	DALI-2/IoT	1195 × 295 × 11	2

[1] All luminaires support DALI-2 Energy Data (DALI part 252) and DALI-2 Diagnostic Data (DALI part 253).
[2] Refer to www.ledvance.com/guarantee for precise conditions
[3] t[h]: L70/B50 @ 25 °C (T_a)/t[h]: L80/B10 @ 25 °C (T_a)

BIOLUX HCL PANEL ZIGBEE GEN 2

Recessed panel luminaires, Tunable White, 110 lm/W, tool-free installation, Zigbee 3.0

1

2

PRODUCT FEATURES

- Adjustable color temperature via Tunable White: 2 700…6 500 K
- Very high color rendering index Ra: > 90
- Initial color consistency: 3 SDCM
- High luminous efficacy: up to 110 lm/W

PRODUCT BENEFITS

- Suitable luminaire for BIOLUX, VIVARES and other Zigbee 3.0 light management systems for simple integration into partner systems
- Compatible with VIVARES cloud services
- Through-wiring possible with included connector box
- Good glare reduction (UGR ≤ 19)
- 5 years BIOLUX HCL system guarantee when operated as part of a BIOLUX HCL system

AREAS OF APPLICATION

- BIOLUX HCL system: Lighting solution for single office areas with up to 48 BIOLUX HCL products
- VIVARES Zigbee system: Open-plan office solution for up to 200 BIOLUX HCL products
- Hotel and office rooms with little daylight
- Nursery and elderly homes

EQUIPMENT / ACCESSORIES

- External control gear included
- Accessories for several mounting options available

FURTHER PRODUCT DETAILS

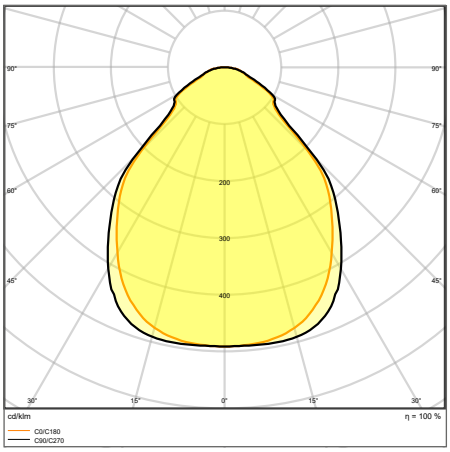

BIOLUX HCL PL 600 S 40W TW ZB

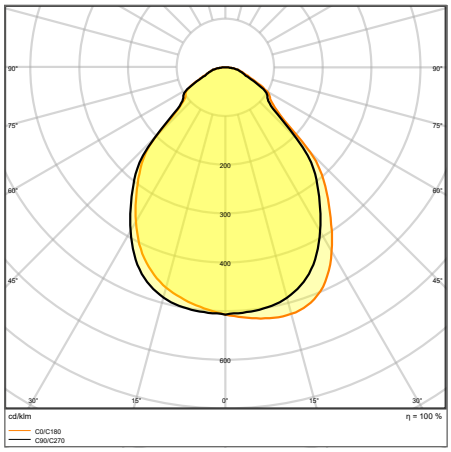

BIOLUX HCL PL 1200 S 37W TW ZB

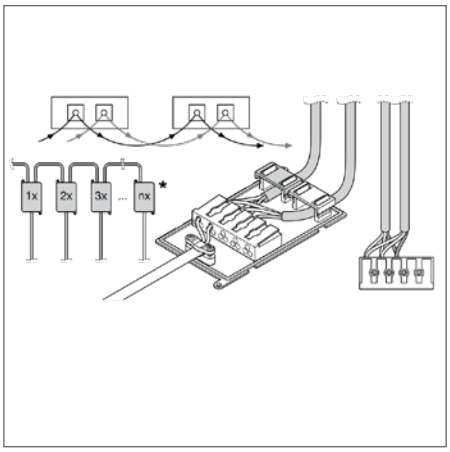

The pictures shown in the catalog are for illustration purposes only. For information on size and color, please refer to the product table.

BIOLUX HCL PANEL ZIGBEE GEN 2

Recessed panel luminaires, Tunable White, 110 lm/W, tool-free installation, Zigbee 3.0

SUPERIOR CLASS

Product name	EAN (GTIN)	El.nr.	Replacement for	W	lm	lm/W	K	L80 [3]	°			L × W × H [mm] Ø × H [mm]	No.
BIOLUX HCL PL 600 S 40W TW ZB	4058075**724549**	**3310286**	4 × 18 W/4 × 14 W FL	40	4400	110	2700…6500	40000	90	Zigbee 3.0		595 × 595 × 11	1
BIOLUX HCL PL 625 S 40W TW ZB	4058075**724563**	—	4 × 18 W/4 × 14 W FL	40	4400	110	2700…6500	40000	90	Zigbee 3.0		620 × 620 × 11	1
BIOLUX HCL PL 1200 S 37W TW ZB	4058075**724587**	**3310287**	3 × 18 W/3 × 14 W FL	37	4100	110	2700…6500	40000	90	Zigbee 3.0		1195 × 295 × 11	2

[1] All luminaires support DALI-2 Energy Data (DALI part 252) and DALI-2 Diagnostic Data (DALI part 253).
[2] Refer to www.ledvance.com/guarantee for precise conditions
[3] t[h]: L70/B50 @ 25 °C (T_a)/t[h]: L80/B10 @ 25 °C (T_a)

PANEL INDIVILED

Recessed luminaires with IndiviLED optics

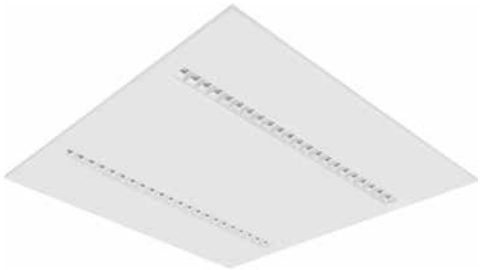

PRODUCT FEATURES

- Metal housing, lenses and reflectors made of polycarbonate (PC)
- Each LED with individual lens and reflector for UGR ≤ 16 and homogenous light distribution
- Lifetime (L80/B10): up to 60 000 h (at 25 °C)
- Initial color consistency: 3 SDCM
- Accessories available for various recessed and surface-mounted options

PRODUCT BENEFITS

- Homogenous light distribution and reduced glare thanks to the IndiviLED optics
- Low-flicker light
- Robust structure with IK08
- Versions available with on/off, IoT-ready DALI-2.0 or Zigbee 3.0 or emergency lighting function acc. to IEC 60598-2-22
- 5 years guarantee

AREAS OF APPLICATION

- Direct replacement for luminaires with fluorescent lamps
- Corridors
- Offices
- Conference rooms
- Reception areas

EQUIPMENT / ACCESSORIES

- Accessories for several mounting options available as an optional accessory
- Security rope for luminaire included
- External control gear included

FURTHER PRODUCT DETAILS

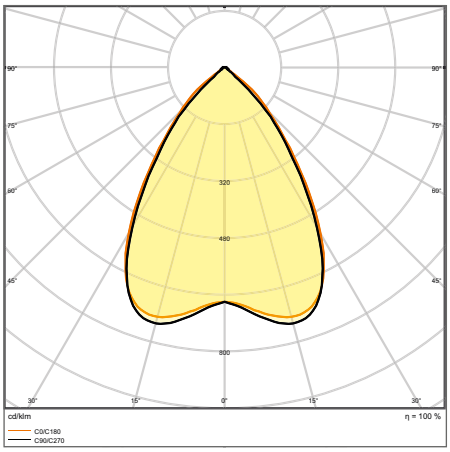

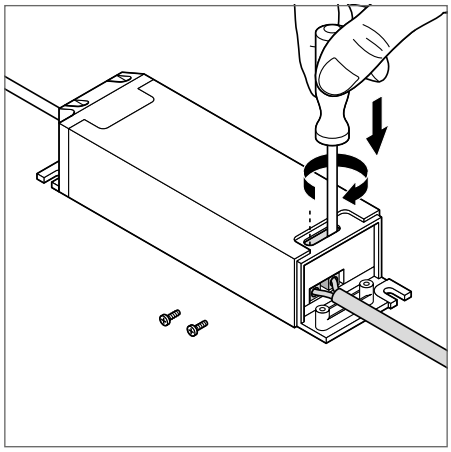

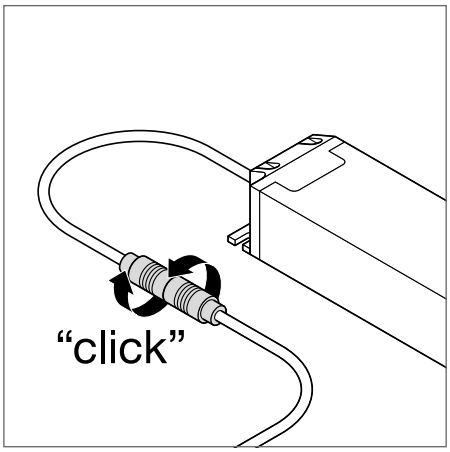

PANEL INDV EM 600 33 W 4000 K

The pictures shown in the catalog are for illustration purposes only. For information on size and color, please refer to the product table.

PANEL INDIVILED

Square, recessed luminaires with IndiviLED optics

PERFORMANCE CLASS · VIVA RES · IoT READY [1] · ENEC · TÜV SÜD [2] · FLICKER VALUE <10% · UGR <16 · CRI ≥80 · IP40 · LEDVANCE 5 year guarantee [3]

Product name	EAN (GTIN)	El.nr.	Replacement for	W	lm	lm/W	K	L80 [4]	°		L × W × H [mm] Ø × H [mm]
PANEL INDV 600 33 W 3000 K	4058075**201132**	**3000648**	4 × 18 W/4 × 14 W FL	33	3800	115	3000	60000	70	—	595 × 595 × 13
PANEL INDV 600 33 W 4000 K	4058075**201156**	**3000649**	4 × 18 W/4 × 14 W FL	33	4000	120	4000	60000	70	—	595 × 595 × 13
PANEL INDV 625 33 W 4000 K	4058075**201194**	—	4 × 18 W/4 × 14 W FL	33	4000	120	4000	60000	70	—	620 × 620 × 13
PANEL INDV 600 33 W 3000 K DALI	4058075**503885**	**3004800**	4 × 18 W/4 × 14 W FL	33	3800	115	3000	60000	70	DALI-2/IoT	595 × 595 × 13
PANEL INDV 600 33 W 4000 K DALI	4058075**503861**	**3004801**	4 × 18 W/4 × 14 W FL	33	3800	115	4000	60000	70	DALI-2/IoT	595 × 595 × 13
PANEL INDV 625 33 W 4000 K DALI	4058075**503922**	—	4 × 18 W/4 × 14 W FL	33	3800	115	4000	60000	70	DALI-2/IoT	620 × 620 × 13
PANEL INDV 600 33 W-4000 K ZBVR	4058075**521841**	**3004826**	4 × 18 W/4 × 14 W FL	33	4000	115	4000	60000	70	Zigbee 3.0	595 × 595 × 13
PANEL INDV 625 33W-4000 K ZBVR	4058075**521865**	—	4 × 18 W/4 × 14 W FL	33	4000	115	4000	60000	70	Zigbee 3.0	620 × 620 × 13

PANEL INDIVILED EMERGENCY

Square recessed luminaire with IndiviLED optics, self-contained emergency luminaire

PERFORMANCE CLASS · UGR <16 · CRI ≥80 · IP40 · LEDVANCE 3 year guarantee [3]

Product name	EAN (GTIN)	El.nr.	Replacement for	W	lm	lm/W	K	L80 [4]	°	L × W × H [mm] Ø × H [mm]
PANEL INDV EM 600 33 W 3000 K	4058075**201293**	**3000652**	4 × 18 W/4 × 14 W FL	33	3800	115	3000	60000	70	595 × 595 × 13
PANEL INDV EM 600 33 W 4000 K	4058075**201316**	—	4 × 18 W/4 × 14 W FL	33	4000	120	4000	60000	70	595 × 595 × 13
PANEL INDV EM 625 33 W 4000 K	4058075**201354**	—	4 × 18 W/4 × 14 W FL	33	4000	120	4000	60000	70	620 × 620 × 13

EMERGENCY LIGHTING PROPERTIES

Product name	Battery life in emergency operation mode	Type of emergency operation test	Type of emergency light operation	Luminous flux in emergency operation mode	Type of Battery
PANEL INDV EM 600 33 W 3000 K	3 h	Automatic	Maintained/Non-maintained	450 lm	LiFePO4
PANEL INDV EM 600 33 W 4000 K	3 h	Automatic	Maintained/Non-maintained	480 lm	LiFePO4
PANEL INDV EM 625 33 W 4000 K	3 h	Automatic	Maintained/Non-maintained	480 lm	LiFePO4

[1] All DALI and Zigbee luminaires support DALI-2 Energy Data (DALI part 252) and DALI-2 Diagnostic Data (DALI part 253).
[2] The ENEC and TÜV certifications apply exclusively to the switchable versions of the luminaire family, DALI versions are exempt.
[3] Refer to www.ledvance.com/guarantee for precise conditions
[4] t[h]: L70/B50 @ 25 °C (T_a)/t[h]: L80/B10 @ 25 °C (T_a)

PANEL PROTECT

Square recessed panel luminaires with IP54 protection and additional performance features

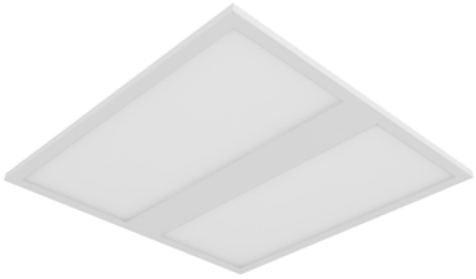

PRODUCT FEATURES

- Type of protection: IP54 (frontside), IP20 (backside)
- Steel housing with notch in the backside for the driver to allow maximum height of 34 mm
- PMMA diffuser
- 5-pole terminal block, cable cross section up to 5 × 2.5 mm²
- Luminaire versions with IoT-ready DALI-2 driver available
- Panel can be customized with optical sensors on individual request

PRODUCT BENEFITS

- Highly versatile due to selectable power steps (Power Select – PS) on the driver and up to 5 040 lm
- Tool-free electrical connection due to push button connector
- Through-wiring possible with included connector box
- Energy savings thanks to high system efficacy: up to 140 lm/W
- High color consistency with SDCM 3
- External driver for extended flexibility and easy installation

AREAS OF APPLICATION

- Direct replacement for luminaires with fluorescent lamps
- Hospitals, laboratories, kitchens, canteens, workspaces

EQUIPMENT / ACCESSORIES

- Accessories for several mounting options available
- Security brackets preinstalled
- Suitable for use with seperate Emergency Conversion Box
- Special mounting frame with an overall height of only 50 mm available separately

FURTHER PRODUCT DETAILS

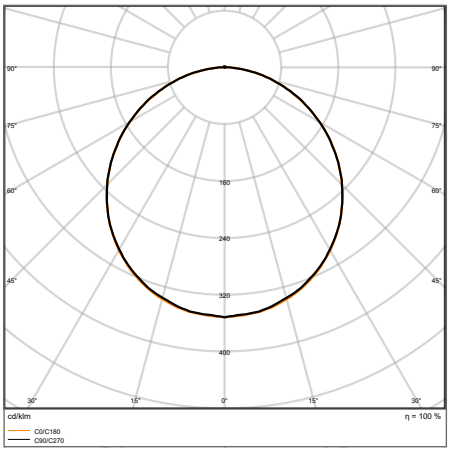

PL PROT 600 P 36W 830 PS

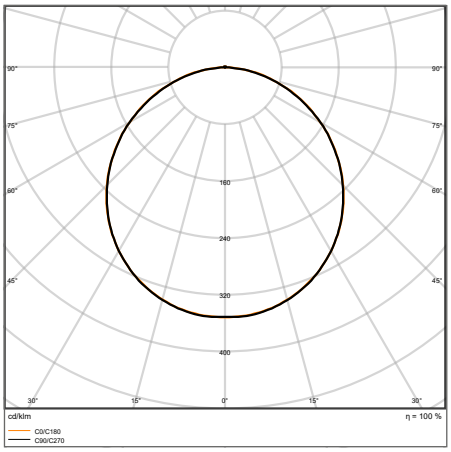

PL PROT 600 P 36W 830 DALIVR

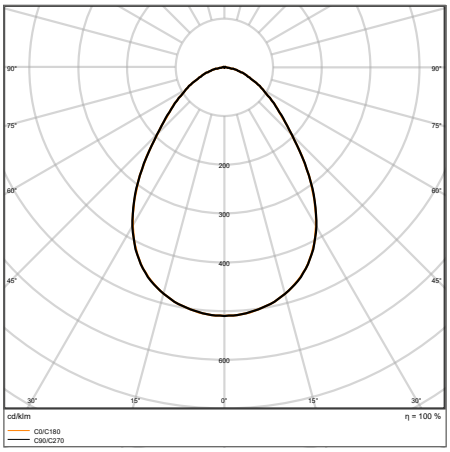

PL PROT 600 P 36W 840 U19 DALIVR

The pictures shown in the catalog are for illustration purposes only. For information on size and color, please refer to the product table.

FURTHER PRODUCT DETAILS

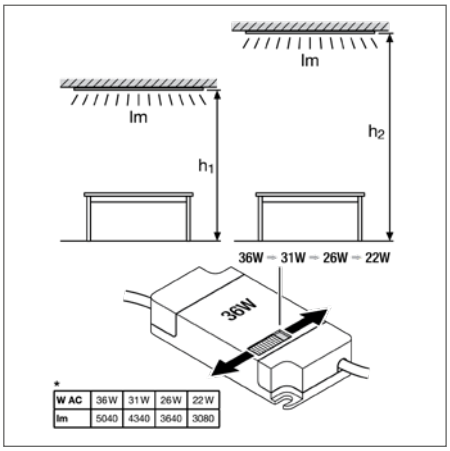

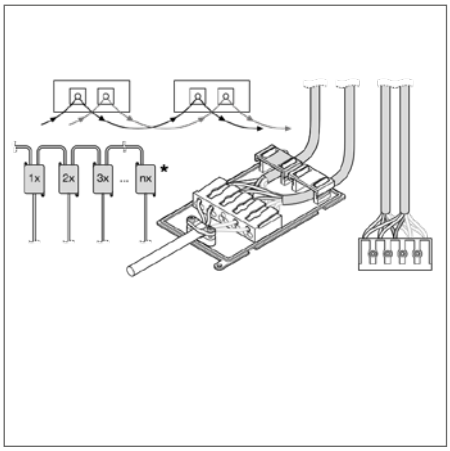

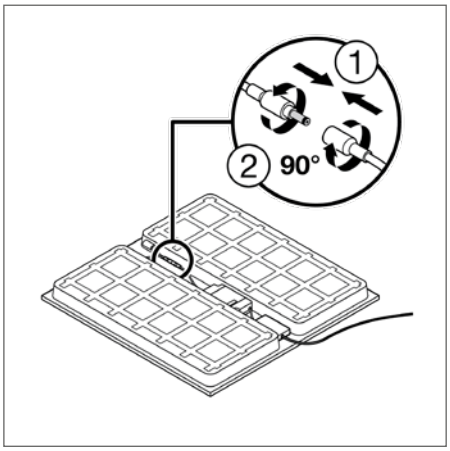

PANEL PROTECT 600/625 PS

Square recessed panel luminaires with IP54 protection and power select (PS) feature

PERFOR-MANCE CLASS

W ▲ ▼ W | FLICKER VALUE <5% | CRI ≥80 | IP20 / IP54 | LEDVANCE 5 year guarantee [1]

Product name	EAN (GTIN)	El.nr.	Replacement for	W	lm	lm/W	K	L80 [2]	∡°	L × W × H [mm] Ø × H [mm]
PL PROT 600 P 36W 830 PS	4099854**082863**	**3310292**	4 × 18 W FL	36/31/26/22	5040/4340/3640/3080	140	3000	70000	120	595 × 595 × 34
PL PROT 600 P 36W 840 PS	4099854**082887**	**3310293**	4 × 18 W FL	36/31/26/22	5040/4340/3640/3080	140	4000	70000	120	595 × 595 × 34
PL PROT 625 P 36W 830 PS	4099854**083365**	—	4 × 18 W FL	36/31/26/22	5040/4340/3640/3080	140	3000	70000	120	620 × 620 × 34
PL PROT 625 P 36W 840 PS	4099854**083389**	—	4 × 18 W FL	36/31/26/22	5040/4340/3640/3080	140	4000	70000	120	620 × 620 × 34

PANEL PROTECT 600/625 UGR < 19 PS

Square recessed panel luminaires with IP54 protection, power select (PS) feature and low glare

PERFOR-MANCE CLASS

W ▲ ▼ W | FLICKER VALUE <5% | CRI ≥80 | IP20 / IP54 | LEDVANCE 5 year guarantee [1]

Product name	EAN (GTIN)	El.nr.	Replacement for	W	lm	lm/W	K	L80 [2]	∡°	L × W × H [mm] Ø × H [mm]
PL PROT 600 P 36W 840 U19 PS	4099854**083303**	**3310296**	4 × 18 W FL	36/31/26/22	5040/4340/3640/3080	140	4000	70000	90	595 × 595 × 34
PL PROT 625 P 36W 840 U19 PS	4099854**083488**	—	4 × 18 W FL	36/31/26/22	5040/4340/3640/3080	140	4000	70000	90	620 × 620 × 34

[1] Refer to www.ledvance.com/guarantee for precise conditions
[2] t[h]: L70/B50 @ 25 °C (T_a)/t[h]: L80/B10 @ 25 °C (T_a)

PANEL PROTECT 600/625 DALI

Square recessed panel luminaires with IP54 protection, DALI-2 IoT technology

PERFORMANCE CLASS | VIVA RES | IoT READY [1] | FLICKER VALUE <5% | CRI ≥80 | IP20 IP54 | LEDVANCE 5 year guarantee [2]

Product name	EAN (GTIN)	El.nr.	Replacement for	W	lm	lm/W	K	L80 [3]	°		L × W × H [mm] Ø × H [mm]
PL PROT 600 P 36W 830 DALIVR	4099854**082900**	**3310294**	4 × 18 W FL	36	5040	140	3000	70000	120	DALI-2/IoT	595 × 595 × 34
PL PROT 600 P 36W 840 DALIVR	4099854**083105**	**3310295**	4 × 18 W FL	36	5040	140	4000	70000	120	DALI-2/IoT	595 × 595 × 34
PL PROT 625 P 36W 830 DALIVR	4099854**083402**	—	4 × 18 W FL	36	5040	140	3000	70000	120	DALI-2/IoT	620 × 620 × 34
PL PROT 625 P 36W 840 DALIVR	4099854**083440**	—	4 × 18 W FL	36	5040	140	4000	70000	120	DALI-2/IoT	620 × 620 × 34

PANEL PROTECT 600/625 UGR < 19 DALI

Square recessed panel luminaires with IP54 protection, DALI-2 IoT technology and low glare

PERFORMANCE CLASS | VIVA RES | IoT READY [1] | FLICKER VALUE <5% | CRI ≥80 | IP20 IP54 | LEDVANCE 5 year guarantee [2]

Product name	EAN (GTIN)	El.nr.	Replacement for	W	lm	lm/W	K	L80 [3]	°		L × W × H [mm] Ø × H [mm]
PL PROT 600 P 36W 840 U19 DALIVR	4099854**083327**	**3310297**	4 × 18 W FL	36	5040	140	4000	70000	90	DALI-2/IoT	595 × 595 × 34
PL PROT 625 P 36W 840 U19 DALIVR	4099854**083501**	—	4 × 18 W FL	36	5040	140	4000	70000	90	DALI-2/IoT	620 × 620 × 34

[1] All luminaires support DALI-2 Energy Data (DALI part 252) and DALI-2 Diagnostic Data (DALI part 253).
[2] Refer to www.ledvance.com/guarantee for precise conditions
[3] t[h]: L70/B50 @ 25 °C (T_a)/t[h]: L80/B10 @ 25 °C (T_a)

PANEL COMFORT CRI 90

Recessed panel luminaires with CRI 90, selectable CCT and power select

PRODUCT FEATURES

- Extruded aluminum frame
- Polystyrene diffuser
- 5-pole terminal block, cable cross section up to 5 × 2.5 mm² (36 W versions)
- Luminaire versions with IoT-ready DALI-2 driver available
- Lifetime (L80/B10): up to 60 000 h (at 25 °C)

PRODUCT BENEFITS

- High performance with CRI 90 and high luminous efficacy
- Luminiare available with on-off and DALI-2 driver
- Good glare reduction (UGR < 19)
- High color consistency with SDCM 3
- Through-wiring possible with included connector box

AREAS OF APPLICATION

- Direct replacement for recessed luminaires with fluorescent lamps
- Offices, conference rooms
- Reception areas, foyers, corridors, elevators, schools, public buildings

EQUIPMENT / ACCESSORIES

- Selectable CCT and power on the external driver (On-off version) or separate CCT switch (DALI version)
- Connector box with 5-pole terminal included

FURTHER PRODUCT DETAILS

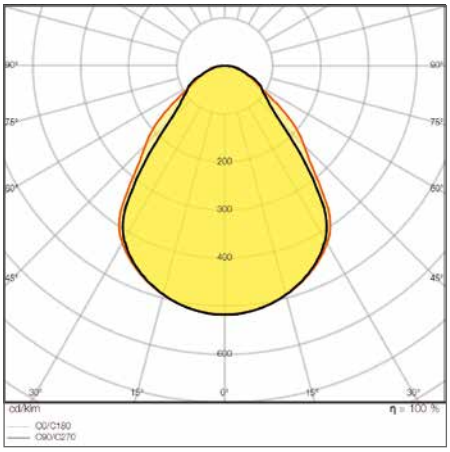

PANEL COMFORT 600 P 36W 930/940 U19 CPS

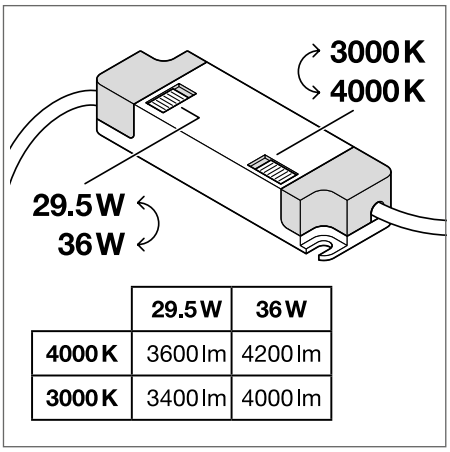

	29.5 W	36 W
4000 K	3600 lm	4200 lm
3000 K	3400 lm	4000 lm

On/Off versions with CCT and lumen switch on driver

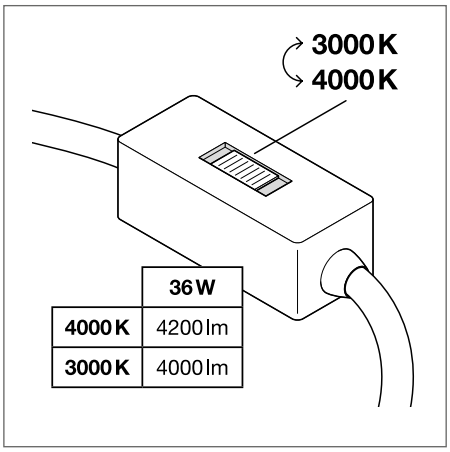

	36 W
4000 K	4200 lm
3000 K	4000 lm

DALI versions with external CCT switch

The pictures shown in the catalog are for illustration purposes only. For information on size and color, please refer to the product table.

PANEL COMFORT CRI 90 600 / 625 UGR<19

Recessed panel luminaires with CRI 90, selectable CCT and power select

Product name	EAN (GTIN)	El.nr.	W	lm	lm/W	K	L80 [3]	°		L × W × H [mm] Ø × H [mm]
PANEL COMFORT 600 P 36W 930/940 U19 CPS	4058075**694460**	**3004888**	29.5	3400	115	3000	60000	90	—	595 × 595 × 35
			29.5	3600	122	4000				
			36.0	4000	111	3000				
			36.0	4200	116	4000				
PANEL COMFORT 625 P 36W 930/940 U19 CPS	4058075**694484**	—	29.5	3400	115	3000	60000	90	—	620 × 620 × 35
			29.5	3600	122	4000				
			36.0	4000	111	3000				
			36.0	4200	116	4000				
PANEL COMFORT 600 P 36W 930/940 U19 DALIVR	4058075**694507**	**3004889**	36.0	4000	111	3000	60000	90	DALI-2/IoT	595 × 595 × 35
			36.0	4200	116	4000				
PANEL COMFORT 625 P 36W 930/940 U19 DALIVR	4058075**694521**	—	36.0	4000	111	3000	60000	90	DALI-2/IoT	620 × 620 × 35
			36.0	4200	116	4000				

[1] All DALI luminaires support DALI-2 Energy Data (DALI part 252) and DALI-2 Diagnostic Data (DALI part 253).
[2] Refer to www.ledvance.com/guarantee for precise conditions
[3] t[h]: L70/B50 @ 25 °C (T_a)/t[h]: L80/B10 @ 25 °C (T_a)

PANEL COMFORT

Square or rectangular recessed panel luminaires with different features: power select (PS), low-glare, DALI-2 IoT or Zigbee 3.0 technology

1

2

3

PRODUCT FEATURES

- Extruded aluminum frame
- Polystyrene diffuser
- 5-pole terminal block, cable cross section up to 5 × 2.5 mm^2
- Luminaire versions with IoT-ready DALI-2 driver available
- Lifetime (L80/B10): 70 000 h (at 25 °C)

PRODUCT BENEFITS

- Highly versatile due to selectable power steps (Power Select - PS) on the driver
- Tool-free electrical connection due to push button connector
- Through-wiring possible with included connector box
- High color consistency with SDCM 3
- Extended services such as energy monitoring and remote maintenance possible with DALI versions

AREAS OF APPLICATION

- Direct replacement for recessed luminaires with fluorescent lamps
- Offices, conference rooms
- Reception areas, foyers, corridors, elevators, schools, public buildings

EQUIPMENT / ACCESSORIES

- Accessories for several mounting options available
- Connector box with 5-pole terminal included
- Security rope for luminaire included
- External control gear included

FURTHER PRODUCT DETAILS

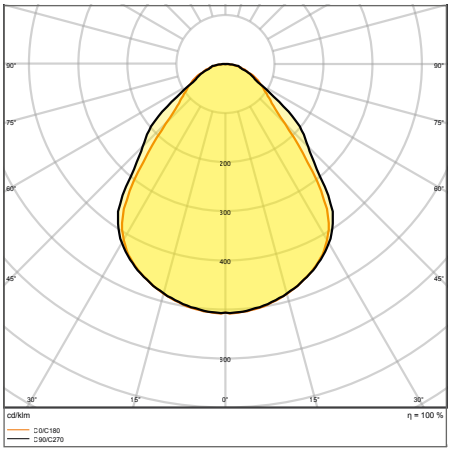

PL CMFT 600 P 28W 830 U19 PS

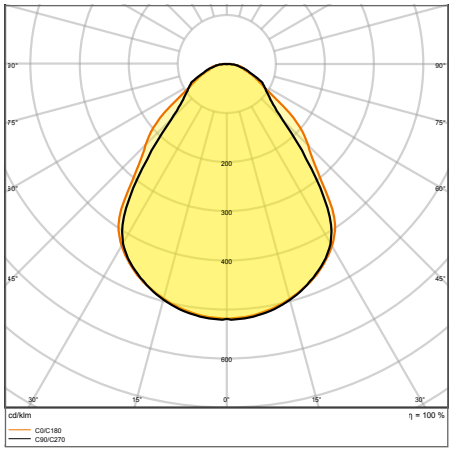

PL CMFT 600 P 30W 830 U19 PS

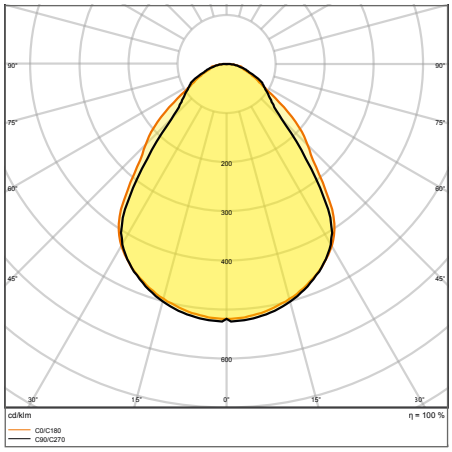

PL CMFT 600 P 33W 830 U19 PS

The pictures shown in the catalog are for illustration purposes only. For information on size and color, please refer to the product table.

FURTHER PRODUCT DETAILS

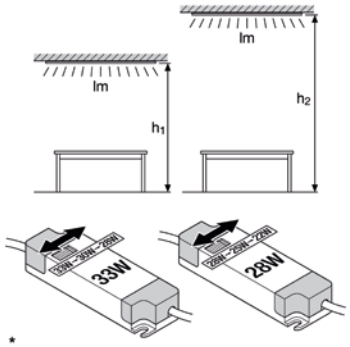

PS-Power Select	PANEL CMFT 33W			PANEL CMFT 26W		
W AC	33	30	28	28	25	22
lm	4320	3900	3640	3640	3250	2900

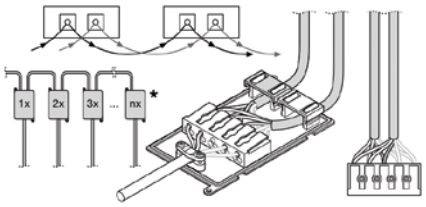

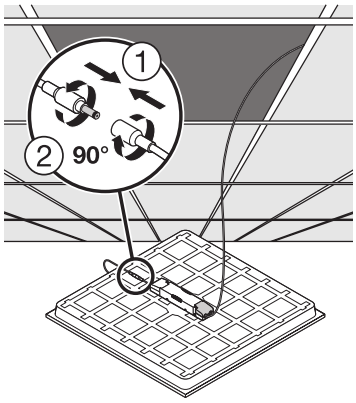

PANEL COMFORT 600 / 625 / 1200 PS

Square or rectangular recessed panel luminaires with power select (PS) feature

PERFOR-MANCE CLASS

FLICKER VALUE <5%

CRI >80

IP20 IP40

LEDVANCE 5 year guarantee [1]

Product name	EAN (GTIN)	El.nr.	Replacement for	W	lm	lm/W	K	L80 [2]	°	L × W × H [mm] Ø × H [mm]	No.
PL CMFT 600 P 28 W 830 PS	4099854**014192**	**3310239**	4 × 18 W FL	28	3640	130	3000	70000	110	595 × 595 × 32	1
PL CMFT 600 P 28 W 840 PS	4099854**014215**	**3310240**	4 × 18 W FL	28	3640	130	4000	70000	110	595 × 595 × 32	1
PL CMFT 600 P 33 W 830 PS	4099854**014864**	**3310237**	4 × 18 W FL	33	4320	130	3000	70000	110	595 × 595 × 32	1
PL CMFT 600 P 33 W 840 PS	4099854**014888**	**3310247**	4 × 18 W FL	33	4320	130	4000	70000	110	595 × 595 × 32	1
PL CMFT 600 P 33 W 865 PS	4099854**014901**	—	4 × 18 W FL	33	4320	130	6500	70000	110	595 × 595 × 32	1
PL CMFT 625 P 28 W 830 PS	4099854**014253**	—	4 × 18 W FL	28	3640	130	3000	70000	110	620 × 620 × 32	2
PL CMFT 625 P 28 W 840 PS	4099854**014277**	—	4 × 18 W FL	28	3640	130	4000	70000	110	620 × 620 × 32	2
PL CMFT 625 P 33 W 830 PS	4099854**014642**	—	4 × 18 W FL	33	4320	130	3000	70000	110	620 × 620 × 32	2
PL CMFT 625 P 33 W 840 PS	4099854**014666**	—	4 × 18 W FL	33	4320	130	4000	70000	110	620 × 620 × 32	2
PL CMFT 1200 P 33 W 830 PS	4099854**002731**	**3310255**	2 × 36 W FL	33	4320	130	3000	70000	110	1195 × 295 × 11	3
PL CMFT 1200 P 33 W 840 PS	4099854**003981**	**3310256**	2 × 36 W FL	33	4320	130	4000	70000	110	1195 × 295 × 11	3

[1] Refer to www.ledvance.com/guarantee for precise conditions
[2] t[h]: L70 / B50 @ 25 °C (T_a) / t[h]: L80 / B10 @ 25 °C (T_a)

PANEL COMFORT 600 / 625 / 1200 UGR < 19 PS

Square or rectangular recessed panel luminaires with power select (PS) feature and low glare

PERFORMANCE CLASS | W ▲ W | FLICKER VALUE <5% | UGR <19 | CRI >80 | IP20 IP40 | LEDVANCE 5 year guarantee [1]

Product name	EAN (GTIN)	El.nr.	Replacement for	W	lm	lm/W	K	L80 [2]		L × W × H [mm] Ø × H [mm]	No.
PL CMFT 600 P 28W 830 U19 PS	4099854**014604**	**3310243**	4 × 18 W FL	28	3640	130	3000	70000	90	595 × 595 × 32	1
PL CMFT 600 P 28W 840 U19 PS	4099854**014628**	**3310244**	4 × 18 W FL	28	3640	130	4000	70000	90	595 × 595 × 32	1
PL CMFT 600 P 33W 830 U19 PS	4099854**015090**	**3310238**	4 × 18 W FL	33	4320	130	3000	70000	90	595 × 595 × 32	1
PL CMFT 600 P 33W 840 U19 PS	4099854**015113**	**3310251**	4 × 18 W FL	33	4320	130	4000	70000	90	595 × 595 × 32	1
PL CMFT 600 P 33W 865 U19 PS	4099854**015137**	—	4 × 18 W FL	33	4320	130	6500	70000	90	595 × 595 × 32	1
PL CMFT 625 P 28W 830 U19 PS	4099854**014376**	—	4 × 18 W FL	28	3640	130	3000	70000	90	620 × 620 × 32	2
PL CMFT 625 P 28W 840 U19 PS	4099854**014413**	—	4 × 18 W FL	28	3640	130	4000	70000	90	620 × 620 × 32	2
PL CMFT 625 P 33W 830 U19 PS	4099854**014529**	—	4 × 18 W FL	33	4320	130	3000	70000	90	620 × 620 × 32	2
PL CMFT 625 P 33W 840 U19 PS	4099854**014543**	—	4 × 18 W FL	33	4320	130	4000	70000	90	620 × 620 × 32	2
PL CMFT 625 P 33W 865 U19 PS	4099854**014567**	—	4 × 18 W FL	33	4320	130	6500	70000	90	620 × 620 × 32	2
PL CMFT 1200 P 33W 830 U19 PS	4099854**004087**	**3310257**	2 × 36 W FL	33	4320	130	3000	70000	90	1195 × 295 × 11	3
PL CMFT 1200 P 33W 840 U19 PS	4099854**004100**	**3310258**	2 × 36 W FL	33	4320	130	4000	70000	90	1195 × 295 × 11	3

PANEL COMFORT 600 / 625 / 1200 DALI

Square or rectangular recessed panel luminaire with DALI-2 IoT technology

PERFORMANCE CLASS | VIVA RES | IoT READY [3] | DALI VERSIONS | FLICKER VALUE <5% | CRI >80 | IP20 IP40 | LEDVANCE 5 year guarantee [1]

Product name	EAN (GTIN)	El.nr.	Replacement for	W	lm	lm/W	K	L80 [2]			L × W × H [mm] Ø × H [mm]	No.
PL CMFT 600 P 28W 830 DALIVR	4099854**014352**	**3310241**	4 × 18 W FL	28	3640	130	3000	70000	110	DALI-2/IoT	595 × 595 × 32	1
PL CMFT 600 P 28W 840 DALIVR	4099854**014505**	**3310242**	4 × 18 W FL	28	3640	130	4000	70000	110	DALI-2/IoT	595 × 595 × 32	1
PL CMFT 600 P 33W 830 DALIVR	4099854**014925**	**3310248**	4 × 18 W FL	33	4320	130	3000	70000	110	DALI-2/IoT	595 × 595 × 32	1
PL CMFT 600 P 33W 840 DALIVR	4099854**015342**	**3310249**	4 × 18 W FL	33	4320	130	4000	70000	110	DALI-2/IoT	595 × 595 × 32	1
PL CMFT 600 P 33W 865 DALIVR	4099854**015410**	—	4 × 18 W FL	33	4320	130	6500	70000	110	DALI-2/IoT	595 × 595 × 32	1
PL CMFT 625 P 28W 830 DALIVR	4099854**014291**	—	4 × 18 W FL	28	3640	130	3000	70000	110	DALI-2/IoT	620 × 620 × 32	2
PL CMFT 625 P 28W 840 DALIVR	4099854**014314**	—	4 × 18 W FL	28	3640	130	4000	70000	110	DALI-2/IoT	620 × 620 × 32	2
PL CMFT 625 P 33W 830 DALIVR	4099854**014338**	—	4 × 18 W FL	33	4320	130	3000	70000	110	DALI-2/IoT	620 × 620 × 32	2
PL CMFT 625 P 33W 840 DALIVR	4099854**014390**	—	4 × 18 W FL	33	4320	130	4000	70000	110	DALI-2/IoT	620 × 620 × 32	2
PL CMFT 1200 P 33W 830 DALIVR	4099854**004001**	**3310259**	2 × 36 W FL	33	4320	130	3000	70000	110	DALI-2/IoT	1195 × 295 × 11	3
PL CMFT 1200 P 33W 840 DALIVR	4099854**004049**	**3310260**	2 × 36 W FL	33	4320	130	4000	70000	110	DALI-2/IoT	1195 × 295 × 11	3

[1] Refer to www.ledvance.com/guarantee for precise conditions
[2] t[h]: L70 / B50 @ 25 °C (T_a) / t[h]: L80 / B10 @ 25 °C (T_a)
[3] All luminaires support DALI-2 Energy Data (DALI part 252) and DALI-2 Diagnostic Data (DALI part 253).

PANEL COMFORT 600 / 625 / 1200 UGR < 19 DALI

Square or rectangular recessed panel luminaire with low glare and DALI-2 IoT technology

PERFORMANCE CLASS · VIVA RES · IoT READY [1] · FLICKER VALUE <5% · UGR <19 · CRI >80 · IP20 / IP40 · LEDVANCE 5 year guarantee [2]

Product name	EAN (GTIN)	El.nr.	Replacement for	W	lm	lm/W	K	L80 [3]			L × W × H [mm] Ø × H [mm]	No.
PL CMFT 600 P 28W 830 U19 DALIVR	4099854**014703**	**3310245**	4 × 18 W FL	28	3640	130	3000	70000	90	DALI-2/IoT	595 × 595 × 32	1
PL CMFT 600 P 28W 840 U19 DALIVR	4099854**014789**	**3310246**	4 × 18 W FL	28	3640	130	4000	70000	90	DALI-2/IoT	595 × 595 × 32	1
PL CMFT 600 P 33W 830 U19 DALIVR	4099854**015304**	**3310252**	4 × 18 W FL	33	4320	130	3000	70000	90	DALI-2/IoT	595 × 595 × 32	1
PL CMFT 600 P 33W 840 U19 DALIVR	4099854**015229**	**3310253**	4 × 18 W FL	33	4320	130	4000	70000	90	DALI-2/IoT	595 × 595 × 32	1
PL CMFT 600 P 33W 865 U19 DALIVR	4099854**015243**	—	4 × 18 W FL	33	4320	130	6500	70000	90	DALI-2/IoT	595 × 595 × 32	1
PL CMFT 625 P 28W 830 U19 DALIVR	4099854**014437**	—	4 × 18 W FL	28	3640	130	3000	70000	90	DALI-2/IoT	620 × 620 × 32	2
PL CMFT 625 P 28W 840 U19 DALIVR	4099854**014482**	—	4 × 18 W FL	28	3640	130	4000	70000	90	DALI-2/IoT	620 × 620 × 32	2
PL CMFT 625 P 33W 830 U19 DALIVR	4099854**014581**	—	4 × 18 W FL	33	4320	130	3000	70000	90	DALI-2/IoT	620 × 620 × 32	2
PL CMFT 625 P 33W 840 U19 DALIVR	4099854**014680**	—	4 × 18 W FL	33	4320	130	4000	70000	90	DALI-2/IoT	620 × 620 × 32	2
PL CMFT 625 P 33W 865 U19 DALIVR	4099854**014727**	—	4 × 18 W FL	33	4320	130	6500	70000	90	DALI-2/IoT	620 × 620 × 32	2
PL CMFT 1200 P 33W 830 U19 DALIVR	4099854**004124**	**3310261**	2 × 36 W FL	33	4320	130	3000	70000	90	DALI-2/IoT	1195 × 295 × 11	3
PL CMFT 1200 P 33W 840 U19 DALIVR	4099854**004162**	**3310262**	2 × 36 W FL	33	4320	130	4000	70000	90	DALI-2/IoT	1195 × 295 × 11	3

PANEL COMFORT 600 / 625 ZIGBEE

Square recessed panel luminaire with Zigbee 3.0 technology

PERFORMANCE CLASS · VIVA RES · IoT READY [1] · FLICKER VALUE <5% · CRI >80 · IP20 / IP40 · LEDVANCE 5 year guarantee [2]

Product name	EAN (GTIN)	El.nr.	Replacement for	W	lm	lm/W	K	L80 [3]			L × W × H [mm] Ø × H [mm]	No.
PL CMFT 600 P 33W 840 ZBVR	4099854**015076**	**3310250**	4 × 18 W FL	33	4320	130	4000	70000	110	Zigbee 3.0	595 × 595 × 32	1
PL CMFT 625 P 33W 840 ZBVR	4099854**014468**	—	4 × 18 W FL	33	4320	130	4000	70000	110	Zigbee 3.0	620 × 620 × 32	2

PANEL COMFORT 600 / 625 UGR < 19 ZIGBEE

Square recessed panel luminaire with low glare and Zigbee 3.0 technology

PERFORMANCE CLASS · VIVA RES · IoT READY [1] · FLICKER VALUE <5% · UGR <19 · CRI >80 · IP20 / IP40 · LEDVANCE 5 year guarantee [2]

Product name	EAN (GTIN)	El.nr.	Replacement for	W	lm	lm/W	K	L80 [3]			L × W × H [mm] Ø × H [mm]	No.
PL CMFT 600 P 33W 840 U19 ZBVR	4099854**014239**	**3310254**	4 × 18 W FL	33	4320	130	4000	70000	90	Zigbee 3.0	595 × 595 × 32	1
PL CMFT 625 P 33W 840 U19 ZBVR	4099854**014802**	—	4 × 18 W FL	33	4320	130	4000	70000	90	Zigbee 3.0	620 × 620 × 32	2

[1] All DALI and Zigbee luminaires support DALI-2 Energy Data (DALI part 252) and DALI-2 Diagnostic Data (DALI part 253).
[2] Refer to www.ledvance.com/guarantee for precise conditions
[3] t[h]: L70 / B50 @ 25 °C (T_a) / t[h]: L80 / B10 @ 25 °C (T_a)

PANEL COMPACT

Square or rectangular recessed panel luminaires with different features: low-glare, DALI-2 or CRI 90

1

2

3

PRODUCT FEATURES

- Extruded aluminum frame
- Polystyrene diffuser
- Lifetime (L80/B10): up to 50 000 h (at 25 °C)

PRODUCT BENEFITS

- Low flicker light thanks to special electronic control gear
- Energy savings thanks to system efficacy of up to 110 lm/W
- External driver for extended flexibility and easy installation
- Version with DALI ECG available
- 5 years guarantee

AREAS OF APPLICATION

- Direct replacement for luminaires with fluorescent lamps
- Offices, conference rooms
- Reception areas, foyers, corridors, elevators

EQUIPMENT / ACCESSORIES

- Accessories for several mounting options available
- External control gear included
- Connector box with 5-pole terminal for through-wiring separately available for cable cross sections up to 2.5 mm²

FURTHER PRODUCT DETAILS

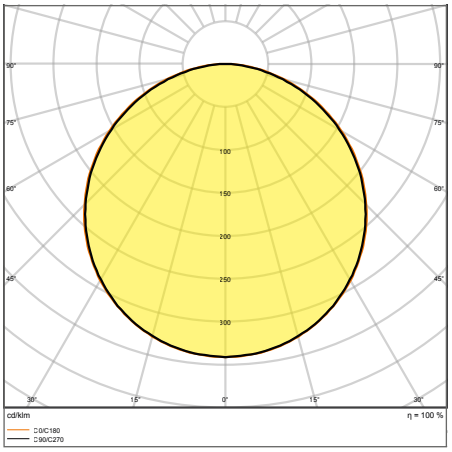

PL COMP 600 V 33W 830 U19

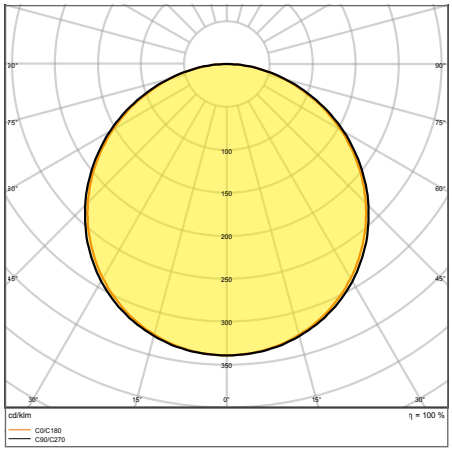

PL COMP 1200 V 33W 840 U19

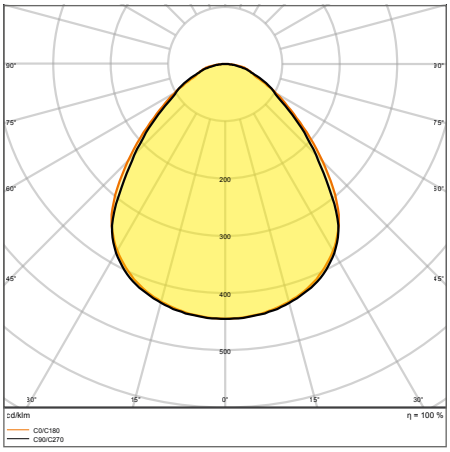

PL COMP 1200×600 V 53W 840 U19

The pictures shown in the catalog are for illustration purposes only. For information on size and color, please refer to the product table.

FURTHER PRODUCT DETAILS

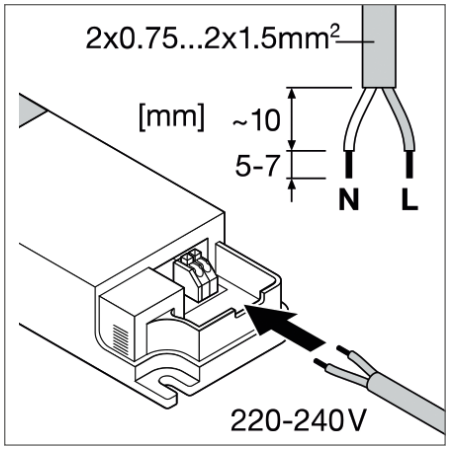

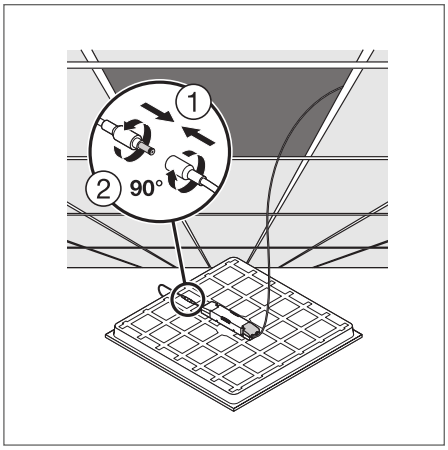

PANEL COMPACT 600 / 625 / 1200

Square or rectangular recessed panel luminaires

VALUE CLASS

TÜV SÜD | FLICKER VALUE <5% | CRI >80 | IP20 / IP40 | LEDVANCE 5 year guarantee [1]

Product name	EAN (GTIN)	El.nr.	Replacement for	W	lm	lm/W	K	L70 [2]	∠°	L × W × H [mm] Ø × H [mm]	No.
PL COMP 600 V 33W 830	4099854**017742**	**3310235**	4 × 18 W/4 × 14 W FL	33	3630	110	3000	70000	90	595 × 595 × 32	1
PL COMP 600 V 33W 840	4099854**017902**	**3310263**	4 × 18 W/4 × 14 W FL	33	3630	110	4000	70000	120	595 × 595 × 32	1
PL COMP 600 V 33W 865	4099854**017940**	**3310264**	4 × 18 W/4 × 14 W FL	33	3630	110	6500	70000	120	595 × 595 × 32	1
PL COMP 625 V 33W 840	4099854**017407**	—	4 × 18 W/4 × 14 W FL	33	3630	110	4000	70000	90	620 × 620 × 32	1
PL COMP 1200 V 33W 840	4099854**017162**	**3310274**	1 × 36 W FL	33	3630	110	4000	70000	120	1195 × 295 × 34	2
PL COMP 1200X600 V 53W 840	4099854**113680**	**3310311**	2 × 36 W FL	53	5830	110	4000	70000	120	1195 × 595 × 34	3

PANEL COMPACT 600 / 625 / 1200 UGR < 19

Square or rectangular recessed panel luminaire with low glare

VALUE CLASS

TÜV SÜD | FLICKER VALUE <5% | UGR <19 | CRI >80 | IP20 / IP40 | LEDVANCE 5 year guarantee [1]

Product name	EAN (GTIN)	El.nr.	Replacement for	W	lm	lm/W	K	L70 [2]	∠°	L × W × H [mm] Ø × H [mm]	No.
PL COMP 600 V 33W 830 U19	4099854**017063**	**3310236**	4 × 18 W/4 × 14 W FL	33	3630	110	3000	70000	120	595 × 595 × 32	1
PL COMP 600 V 33W 840 U19	4099854**017223**	**3310265**	4 × 18 W/4 × 14 W FL	33	3630	110	4000	70000	90	595 × 595 × 32	1
PL COMP 600 V 33W 865 U19	4099854**017308**	—	4 × 18 W/4 × 14 W FL	33	3630	110	6500	70000	90	595 × 595 × 32	1
PL COMP 625 V 33W 840 U19	4099854**017469**	—	4 × 18 W/4 × 14 W FL	33	3630	110	4000	70000	120	620 × 620 × 32	1
PL COMP 1200 V 33W 840 U19	4099854**017209**	**3310275**	1 × 36 W FL	33	3630	110	4000	70000	90	1195 × 295 × 34	2
PL COMP 1200X600 V 53W 840 U19	4099854**017643**	**3310277**	2 × 36 W FL	53	5830	110	4000	70000	90	1195 × 595 × 34	3

[1] Refer to www.ledvance.com/guarantee for precise conditions
[2] t[h]: L70 / B50 @ 25 °C (T_a) / t[h]: L80 / B10 @ 25 °C (T_a)

PANEL COMPACT 600 / 625 / 1200 DALI

Square or rectangular recessed panel luminaire with DALI-2 technology

VALUE CLASS | VIVA RES | TÜV SÜD | FLICKER VALUE <5% | CRI >80 | IP20 IP40 | LEDVANCE 5 year guarantee[1]

Product name	EAN (GTIN)	El.nr.	Replacement for	W	lm	lm/W	K	L70[2]	°		L × W × H [mm] Ø × H [mm]	No.
PL COMP 600 V 33W 830 DALI	4099854**017803**	**3310268**	4 × 18 W/4 × 14 W FL	33	3630	110	3000	70000	120	DALI-2	595 × 595 × 32	1
PL COMP 600 V 33W 840 DALI	4099854**017926**	**3310269**	4 × 18 W/4 × 14 W FL	33	3630	110	4000	70000	120	DALI-2	595 × 595 × 32	1
PL COMP 600 V 33W 865 DALI	4099854**017025**	**3310270**	4 × 18 W/4 × 14 W FL	33	3630	110	6500	70000	120	DALI-2	595 × 595 × 32	1
PL COMP 625 V 33W 840 DALI	4099854**017421**	—	4 × 18 W/4 × 14 W FL	33	3630	110	4000	70000	120	DALI-2	620 × 620 × 32	1
PL COMP 1200 V 33W 840 DALI	4099854**017186**	**3310278**	1 × 36 W FL	33	3630	110	4000	70000	120	DALI-2	1195 × 295 × 34	2
PL COMP 1200X600 V 53W 840 DALI	4099854**113703**	**3310312**	2 × 36 W FL	53	5830	110	4000	70000	120	DALI-2	1195 × 595 × 34	3

PANEL COMPACT 600 / 625 / 1200 UGR < 19 DALI

Square or rectangular recessed panel luminaire with low glare and DALI-2 technology

VALUE CLASS | VIVA RES | TÜV SÜD | FLICKER VALUE <5% | UGR <19 | CRI >80 | IP20 IP40 | LEDVANCE 5 year guarantee[1]

Product name	EAN (GTIN)	El.nr.	Replacement for	W	lm	lm/W	K	L70[2]	°		L × W × H [mm] Ø × H [mm]	No.
PL COMP 600 V 33W 830 U19 DALI	4099854**017100**	**3310271**	4 × 18 W/4 × 14 W FL	33	3630	110	3000	70000	90	DALI-2	595 × 595 × 32	1
PL COMP 600 V 33W 840 U19 DALI	4099854**017261**	**3310272**	4 × 18 W/4 × 14 W FL	33	3630	110	4000	70000	90	DALI-2	595 × 595 × 32	1
PL COMP 600 V 33W 865 U19 DALI	4099854**017322**	—	4 × 18 W/4 × 14 W FL	33	3630	110	6500	70000	90	DALI-2	595 × 595 × 32	1
PL COMP 625 V 33W 840 U19 DALI	4099854**017483**	—	4 × 18 W/4 × 14 W FL	33	3630	110	4000	70000	90	DALI-2	620 × 620 × 32	1
PL COMP 1200 V 33W 840 U19 DALI	4099854**017247**	**3310279**	1 × 36 W FL	33	3630	110	4000	70000	90	DALI-2	1195 × 295 × 34	2
PL COMP 1200X600 V 53W 840 U19 DALI	4099854**017704**	**3310281**	2 × 36 W FL	53	5830	110	4000	70000	90	DALI-2	1195 × 595 × 34	3

PANEL COMPACT 600 / 1200 UGR < 19 CRI 90

Square or rectangular recessed panel luminaire with low glare and CRI 90

VALUE CLASS | TÜV SÜD | FLICKER VALUE <5% | UGR <19 | CRI >90 | IP20 IP40 | LEDVANCE 5 year guarantee[1]

Product name	EAN (GTIN)	El.nr.	Replacement for	W	lm	lm/W	K	L70[2]	°	L × W × H [mm] Ø × H [mm]	No.
PL COMP 600 V 30W 940 U19	4099854**017346**	**3310266**	4 × 18 W/4 × 14 W FL	30	3120	104	4000	70000	90	595 × 595 × 32	1
PL COMP 600 V 35W 940 U19	4099854**017360**	**3310267**	4 × 18 W/4 × 14 W FL	35	3640	104	4000	70000	90	595 × 595 × 32	1
PL COMP 1200 V 35W 940 U19	4099854**017285**	**3310276**	1 × 36 W FL	35	3640	104	4000	70000	90	1195 × 295 × 34	2

[1] Refer to www.ledvance.com/guarantee for precise conditions
[2] t[h]: L70 / B50 @ 25 °C (T_a) / t[h]: L80 / B10 @ 25 °C (T_a)

PANEL COMPACT 600 / 1200 UGR < 19 DALI CRI 90

Square or rectangular recessed panel luminaire with low glare, CRI90 and DALI-2 technology

VALUE CLASS

FLICKER VALUE <5% | UGR <19 | CRI >90 | IP20 IP40 | LEDVANCE 5 year guarantee [1]

Product name	EAN (GTIN)	El.nr.	Replacement for	W	lm	lm/W	K	L70 [2]				L × W × H [mm] Ø × H [mm]	No.
PL COMP 600 V 35W 940 U19 DALI	4099854**017384**	**3310273**	4 × 18 W/4 × 14 W FL	35	3640	104	4000	70000	90	DALI-2		595 × 595 × 32	1
PL COMP 1200 V 35W 940 U19 DALI	4099854**017520**	**3310280**	1 × 36 W FL	35	3640	104	4000	70000	90	DALI-2		1195 × 295 × 34	2

[1] Refer to www.ledvance.com/guarantee for precise conditions
[2] t[h]: L70 / B50 @ 25 °C (T_a) / t[h]: L80 / B10 @ 25 °C (T_a)

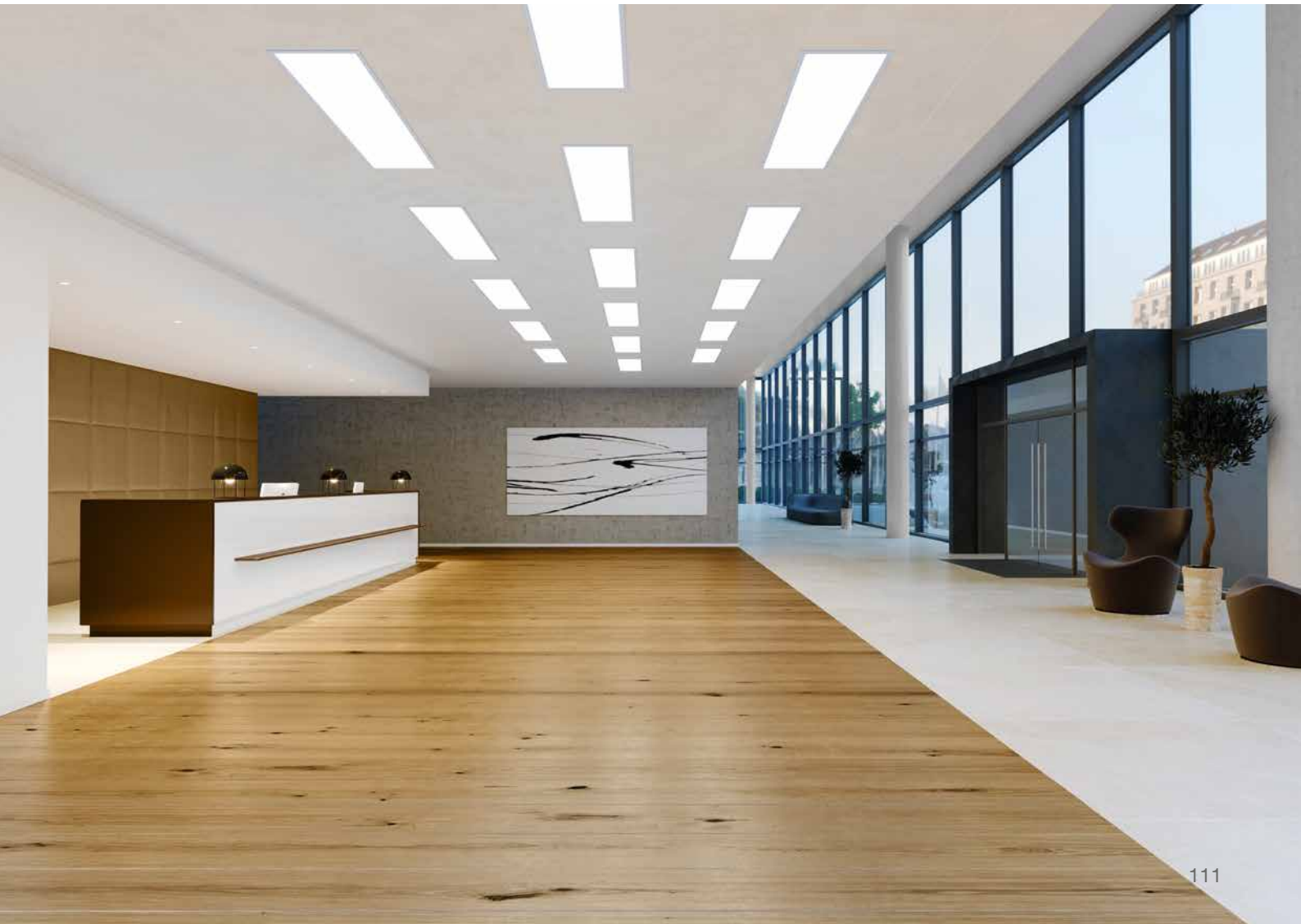

COMPATIBILITY OF PANEL ACCESSORIES WITH PANEL FAMILIES[1]

1. SURFACE MOUNT KIT H75/H50

- Pre-assembled ready to install
- Simple fixing with magnets
- Cross brace for greater stability
- Material: aluminum

2. SURFACE MOUNT KIT VALUE

- Kit for tool-free mounting with corner clips
- Material: aluminum

3. SUSPENSION KIT

- Suspension length: 1 500 mm
- Material: steel

4. PANEL SECURITY KIT 4 ×

- Includes wires and brackets
- Material: steel

5. RECESSED MOUNT CLIPS

- Ceiling thickness: 10 to 20 mm
- Material: steel

6. RECESSED MOUNT FRAME

- Pre-assembled ready to install
- Seamless recessed mounting
- Ceiling thickness: 8 to 30 mm
- Material: aluminum

7. CONNECTOR BOX 5-POLE

- Tool-free electrical connection due to push button connector
- Through-wiring made possible
- Suitable for cable cross section up to 5 × 2.5 mm²

8. EMERGENCY CONVERSION BOX

- Conversion of selected LEDVANCE panels to emergency luminaires
- Plug-and-play system allows easy installation
- Battery technology: LiFePO4

9. PANEL 1200 CABLE EXTENSION TWIST LOCK

- Improves visual appearance of the Panel in suspended application
- Extension cable on DC side allowing to hide the driver behind the ceiling
- Tool-free installation via twist-lock connection

[1] The accessories are compatible with the Panels in the respectively matching size. For details refer to the User Instructions.

COMPATIBILITIES AT A GLANCE

	Accessories	GTIN (EAN)	EL.NR.	PANEL TW/ BIOLUX	PANEL INDIVILED	PANEL PROTECT	PANEL COMFORT	PANEL COMPACT
1	Panel 600 Surface Mount Kit H75	4058075**472914**	**3001104**	✓		✓	✓	✓
	Panel 625 Surface Mount Kit H75	4058075**472938**	—	✓		✓	✓	✓
	Panel 1200x300 Surface Mount Kit	4058075**108820**	**3241051**	✓			✓	
	Panel 600 Surface Mount Kit H75 BK	4058075**834330**	—	✓		✓	✓	✓
	Panel 625 Surface Mount Kit H75 BK	4058075**834354**	—	✓		✓	✓	✓
	Panel 1200x300 Surface Mount Kit BK	4058075**834378**	—	✓			✓	
	Panel 600 Surface Mount Kit H50	4058075**826397**	**3310298**	✓		✓		
	Panel 625 Surface Mount Kit H50	4058075**826403**	—	✓		✓		
2	Panel 600 Surface Mount Kit H70 Value	4058075**402843**	**3001105**	✓		✓	✓	✓
	Panel 625 Surface Mount Kit H70 Value	4058075**402867**	—	✓		✓	✓	✓
	Panel 1200x300 SF Mount Kit H70 Value	4099854**018497**	**3310282**	✓			✓	✓
	Panel 1200x600 Surface Mount Kit Value	4058075**389823**	**3001106**	✓				✓
3	Panel Suspension Kit	4058075**402928**	**3001107**	✓	✓[2]	✓	✓	✓
4	Panel Security Kit 4x	4058075**472990**	—	✓[8]		pre-installed	pre-installed	pre-installed
5	Panel Recessed Mount Clips Value 4x	4058075**409859**	**3001108**	✓	✓	✓	✓	✓
6	Panel 600 Recessed Mount Frame	4058075**402881**	—	✓		✓	✓	✓
	Panel 625 Recessed Mount Frame	4058075**402904**	**3001111**	✓		✓	✓	✓
	Panel 1200x300 Recessed Mount Frame	4058075**472976**	**3001109**	✓			✓	✓
7	Connector Box 5-Pole L/N	4058075**473010**	**1311993**		✓[3]	pre-installed	pre-installed	✓[3]
	Connector Box 5-Pole L/N/PE/D+/D-	4058075**473034**	**1311994**	pre-installed[9]	✓[4]	pre-installed	pre-installed	✓[4]
8	Emergency Conversion Box AT 3H	4058075**237025**	**3242482**		✓[6]	✓[5]	✓[5/7]	✓[5]
9	Panel 1200 Cable Extension Twist Lock	4099854**018510**	**3310283**				✓	

Technical product details for panel accessories found on next page

[1] The accessories are compatible with the Panels in the respectively matching size. For details refer to the User Instructions.
[2] Not in combination with Panel IndiviLED Emergency
[3] Only with standard versions, not for DALI or Emergency versions
[4] Only with DALI or Emergency versions
[5] Not in combination with Surface Mount Kits, Surface Mount Clips or Suspension Kit
[6] Particular Emergency versions available
[7] Not in combination with CRI 90 versions
[8] DALI versions only
[9] Zigbee version only

PANEL ACCESSORIES

Mounting accessories for panel luminaires,
combination according to the accessories matrix

1

2

3

4

5

6

7

8

9

10

11

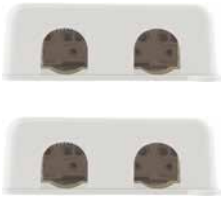
12

13

14

- Suspension Kit:
  suspension length 1.5 m adjustable for various applications by screw connection
- Surface Mount Kit:
  sturdy, cross-stiffened aluminum frame with magnetic corners
- Surface Mount Kit Value:
  aluminum frame with polycarbonate strip. With rectangular frame, panel insertion is possible from short or long frame side.
- Recessed Mount Clips Value 1x4:
  ceiling thickness 10–20 mm, plasterboard, wood and metal ceilings
- Cable Twist Lock Extension: Improves visual appearance of the Panel 1 200 in suspended application. Tool free installation by linking the extension wire into the existing twist lock connection between panel and driver.

The pictures shown in the catalog are for illustration purposes only. For information on size and color, please refer to the product table.

PANEL ACCESSORIES

Mounting accessories for panel luminaires, combination according to the accessories matrix

Product name	EAN (GTIN)	El.nr.	L × W × H [mm] Ø × H [mm]	MATERIAL	COLOR		No.
PANEL 600 SURFACE MOUNT KIT H75	4058075**472914**	3001104	601 × 601 × 75	Aluminum	White	1	1
PANEL 625 SURFACE MOUNT KIT H75	4058075**472938**	—	626 × 626 × 75	Aluminum	White	1	1
PANEL 1200 Surface Mount Kit	4058075**108820**	3241051	1201 × 301 × 56	Aluminum	White	1	2
PANEL 600 SURFACE MOUNT KIT H75 BK	4058075**834330**	—	600 × 600 × 76	Aluminum	Black	1	3
PANEL 625 SURFACE MOUNT KIT H75 BK	4058075**834354**	—	625 × 625 × 76	Aluminum	Black	1	3
PANEL 1200 SURFACE MOUNT KIT BK	4058075**834378**	—	1200 × 300 × 56	Aluminum	Black	1	4
PANEL 600 SURFACE MOUNT KIT H50	4058075**826397**	3310298	600 × 600 × 50	Aluminum	White	1	1
PANEL 625 SURFACE MOUNT KIT H50	4058075**826403**	—	625 × 625 × 50	Aluminum	White	1	1
PANEL 600 SURFACE MOUNT KIT H70 VAL	4058075**402843**	3001105	613 × 613 × 70	Aluminum	White	1	5
PANEL 625 SURFACE MOUNT KIT H70 VAL	4058075**402867**	—	638 × 638 × 70	Aluminum	White	1	5
PANEL 1200 X 300 SF MOUNT KIT H70 VAL	4099854**018497**	3310282	1215 × 315 × 72	Aluminum	White	1	6
PANEL 1200x600 SURFACE MOUNT KIT VAL	4058075**389823**	3001106	1213 × 613 × 72	Aluminum	White	1	6
PANEL Suspension Kit	4058075**402928**	3001107	30 × —	Steel	Steel	1	7
PANEL SECURITY KIT 4x	4058075**472990**	—	1000 × 17 × 4	Steel	Steel	4	8
PANEL RECESSED MOUNT CLIPS VAL 4x	4058075**409859**	3001108	25 × 45 × 33	Steel	Steel	4	9
PANEL 600 RECESSED MOUNT FRAME	4058075**402881**	—	625 × 625 × 76	Aluminum	White	1	10
PANEL 625 RECESSED MOUNT FRAME	4058075**402904**	3001111	650 × 650 × 76	Aluminum	White	1	10
PANEL 1200x300 RECESSED MOUNT FRAME	4058075**472976**	3001109	1224 × 324 × 76	Aluminum	White	1	11
CONNECTOR BOX 5POLE L/N 4x	4058075**473010**	1311993	115 × 56 × 19	Polycarbonate (PC)	White	4	12
CONNECTOR BOX 5POLE L/N/PE/D+/D- 4x	4058075**473034**	1311994	115 × 56 × 19	Polycarbonate (PC)	White	4	12
EM CONVERSION BOX	4058075**237025**	3242482	292 × 81 × 41	—	—	1	13
PANEL 1200 CABLE EXT TWIST LOCK	4099854**018510**	3310283	13 × 2400	Polyvinylchlorid (PVC)	Transparent	1	14

SUSPENDED & SURFACE-MOUNTED LUMINAIRES

GREAT LIGHT FOR GREAT RESULTS

NEW

LINEAR INDIVILED DIRECT/INDIRECT GEN 2

EVER LOOP

PERFOR-MANCE CLASS

Page 118

LINEAR INDIVILED DIRECT/INDIRECT PS
LINEAR INDIVILED DIRECT/INDIRECT DALI

LINEAR INDIVILED PENDANT LUMINAIRE WITH DIRECT AND INDIRECT EMISSION OF LIGHT

- Minimalistic LEDVANCE SCALE design in extruded aluminum housing
- Includes EVERLOOP: Convenient replacement of light source and LED driver
- Pendant luminaire with direct light emission (70 %) and indirect light emission (30 %)

NEW

LINEAR INDIVILED DIRECT GEN 2

EVER LOOP

PERFOR-MANCE CLASS

Page 120

LINEAR INDIVILED DIRECT PS
LINEAR INDIVILED DIRECT DALI

LINEAR INDIVILED SURFACE-MOUNTED AND PENDANT LUMINAIRE

- Minimalistic LEDVANCE SCALE design in extruded aluminum housing
- Includes EVERLOOP: Convenient replacement of light source and LED driver
- High performance with CRI 90 and up to 135 lm/W

PANEL DIRECT/INDIRECT

PERFOR-MANCE CLASS

Page 124

PANEL DIRECT/INDIRECT
PANEL DIRECT/INDIRECT DALI
PANEL DIRECT/INDIRECT ZIGBEE

ADVANCED PENDANT LUMINAIRE WITH DIRECT AND INDIRECT EMISSION OF LIGHT

- Functional SCALE design luminaire for office applications (driver integrated in the ceiling rose)
- Special directional light design and PMMA diffuser for homogeneous, low-glare lighting (UGR < 19)
- Low-flicker light thanks to special electronic control gear

Our suspended and surface-mounted luminaires all feature our unique LEDVANCE award winning and distinctive SCALE DESIGN language with design elements that combine a refined form and function.

SCALE DESIGN

WOULD YOU LIKE MORE INFORMATION?

Scan this code to discover more about the feature-packed Linear IndiviLED Gen 2 luminaires:
ledvance.com/linear-indiviled-video

Discover more about our new EVERLOOP luminaires at:
ledvance.com/everloop

OUR EVERLOOP PIONEERS

LINEAR INDIVILED GEN 2

The Linear IndiviLED Gen 2 luminaires are the first products in the new EVERLOOP range from LEDVANCE and are both available as on/off versions or with additional DALI-2.0 IoT-ready and VIVARES compatible driver.

Thanks to great light output, excellent CRI 90 color rendering and an ideal distribution of direct and optional indirect light, Linear IndiviLED Gen 2 is always the right product for environments where a high quality of light and people's well-being are equally important – from offices to educational establishments. Unlike conventional LED luminaires, this product's drivers and light sources are easy to replace and upgrade – either suspended via the optionally available suspension kit accessory or as a surface-mounted luminaire, and as an individual luminaire or continuos line configuration, depending on your application needs.

OVERVIEW OF THE NEW LINEAR INDIVILED GEN 2

EVERLOOP
Convenient upgradability of light source and driver

SCALE DESIGN
Revised design for easier installation and wiring

FLEXIBILITY
Up to 9 000 lm and selectable power efficacy up to 137 lm/W @ CRI 90

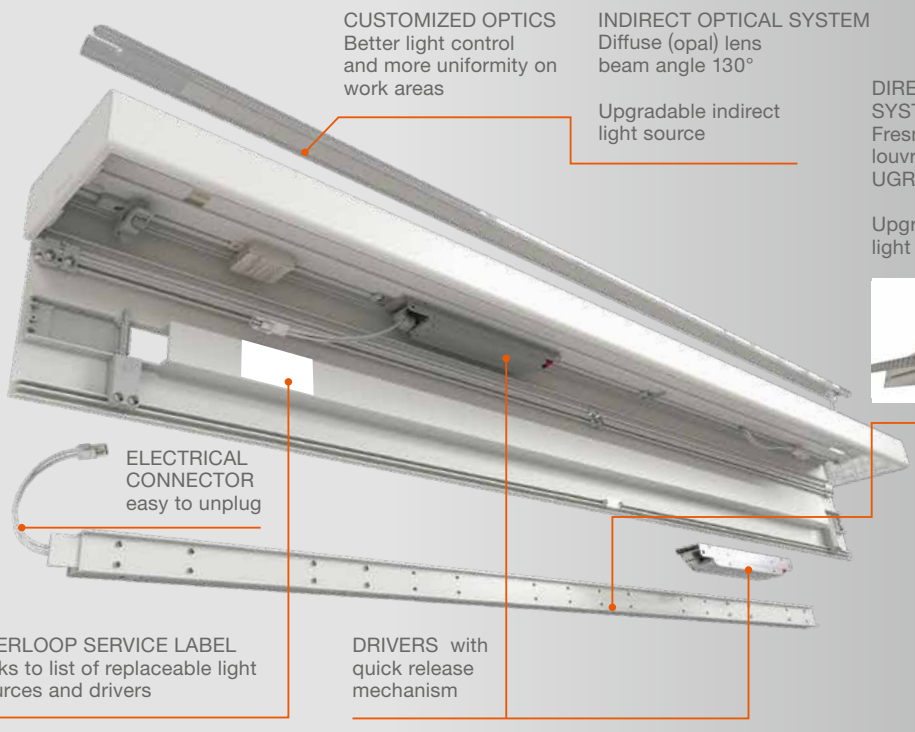

LINEAR INDIVILED DIRECT/INDIRECT GEN 2

Pendant luminaires with EVERLOOP design for a sustainable and convenient upgrade of light source and driver

PRODUCT FEATURES

- Minimalistic LEDVANCE SCALE design in extruded aluminum housing
- Includes EVERLOOP: Convenient replacement of light source and LED driver
- Linkable into seamless light line with accessories (surface or pendant mounting)
- Pendant mounting with suspension kit (to be ordered separately)
- Available in 2 versions: with on/off driver and with DALI 2.0 IoT driver

PRODUCT BENEFITS

- Easy upgradability of light source and driver (EVERLOOP design)
- Homogenous light distribution and reduced glare (UGR ≤ 19) thanks to IndiviLED® optics
- Pendant luminaires with direct light emission (70 %) and indirect light emission (30 %)
- High performance with CRI90 and up to 133 lm/W
- Easy installation

AREAS OF APPLICATION

- Direct replacement for luminaires with fluorescent lamps
- Offices, education, public buildings
- Single and continuous line configuration
- Direct and indirect lighting

EQUIPMENT / ACCESSORIES

- Suspension kit available for pendant luminaire version (to be ordered separately)
- Inline, corner and infill connectors available as separate accessory
- Through-wiring cable kit available

FURTHER PRODUCT DETAILS

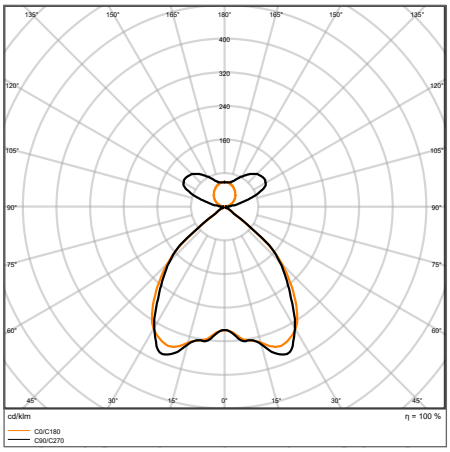

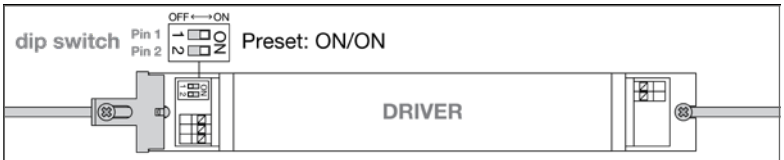

LINEAR IndiviLED® DIR/IND	DRIVER DIRECT	dip switch Pin 1	dip switch Pin 2	dip switch Preset	mA	W	lm
LN INV DI 1200 P 55W 930 PS WT	OSRAM IT FIT 40/ 220...240/ 800 CS L	OFF	OFF	–	500	25	3150
		OFF	ON	–	600	30	3700
		ON	OFF	–	700	36	4400
		ON	ON	Preset	800	40	4800
LN INV DI 1200 P 55W 940 PS WT	OSRAM IT FIT 40/ 220...240/ 800 CS L	OFF	OFF	–	500	25	3250
		OFF	ON	–	600	30	3900
		ON	OFF	–	700	36	4600
		ON	ON	Preset	800	40	5050
LN INV DI 1500 P 69W 930 PS WT	OSRAM IT FIT 40/ 220...240/ 800 CS L	OFF	OFF	–	800	40	4850
		OFF	ON	–	900	46	5450
		ON	OFF	–	975	48	5650
		ON	ON	Preset	1050	52	6050
LN INV DI 1500 P 69W 940 PS WT	OSRAM IT FIT 40/ 220...240/ 800 CS L	OFF	OFF	–	800	40	5200
		OFF	ON	–	900	46	5900
		ON	OFF	–	975	48	6100
		ON	ON	Preset	1050	52	6550

DRIVER INDIRECT	dip switch Pin 1	dip switch Pin 2	dip switch Preset	mA	W	lm	Total mA	Total W	Total lm	Total lm/W
OSRAM IT FIT 18/ 220...240/ 350 CS L	OFF	OFF	–	200	10	1300	700	35	4450	127
	OFF	ON	–	250	13	1650	850	43	5350	124
	ON	OFF	–	250	13	1650	950	49	6050	123
	ON	ON	Preset	300	15	2000	1100	55	6800	124
OSRAM IT FIT 18/ 220...240/ 350 CS L	OFF	OFF	–	200	10	1350	700	35	4600	131
	OFF	ON	–	250	13	1800	850	43	5700	133
	ON	OFF	–	250	13	1800	950	49	6400	131
	ON	ON	Preset	300	15	2150	1100	55	7200	131
OSRAM IT FIT 18/ 220...240/ 350 CS L	OFF	OFF	–	250	13	1800	1050	53	6650	125
	OFF	ON	–	300	15	2150	1200	61	7600	125
	ON	OFF	–	300	15	2150	1275	63	7800	124
	ON	ON	Preset	350	17	2300	1400	69	8350	121
OSRAM IT FIT 18/ 220...240/ 350 CS L	OFF	OFF	–	250	13	1900	1050	53	7100	134
	OFF	ON	–	300	15	2300	1200	61	8200	134
	ON	OFF	–	300	15	2300	1275	63	8400	133
	ON	ON	Preset	350	17	2500	1400	69	9050	131

INV DI 1200 P 55W 940 PS WT

The pictures shown in the catalog are for illustration purposes only. For information on size and color, please refer to the product table.

LINEAR INDIVILED DIRECT/INDIRECT GEN 2 PS

Pendant luminaire for single or light line office application with CRI90 and power select (PS) feature

PERFORMANCE CLASS | W/W | FLICKER VALUE <5% | UGR <19 | CRI >90 | IP20 | LEDVANCE 5 year guarantee[1]

	Product name	EAN (GTIN)	El.nr.	Replacement for	W	lm	lm/W	K	L80[2]	°	L × W × H [mm] Ø × H [mm]
NEW	LN INV DI 1200 P 55W 930 PS WT	4099854**135156**	**3361398**	2 × 36 W FL	55	6800	124	3000	70000	90 + 130	1210 × 125 × 43
NEW	LN INV DI 1200 P 55W 940 PS WT	4099854**135170**	**3361399**	2 × 36 W FL	55	7200	131	4000	70000	90 + 130	1210 × 125 × 43
NEW	LN INV DI 1500 P 69W 930 PS WT	4099854**135231**	**3361402**	2 × 58 W FL	69	8350	121	3000	70000	90 + 130	1475 × 125 × 43
NEW	LN INV DI 1500 P 69W 940 PS WT	4099854**135255**	**3361403**	2 × 58 W FL	69	9050	131	4000	70000	90 + 130	1475 × 125 × 43

LINEAR INDIVILED DIRECT/INDIRECT GEN 2 DALI

Pendant luminaire for single or light line office application with CRI90 and DALI-2 IoT technology

PERFORMANCE CLASS | VIVARES | IoT READY[3] | FLICKER VALUE <5% | UGR <19 | CRI >90 | IP20 | LEDVANCE 5 year guarantee[1]

	Product name	EAN (GTIN)	El.nr.	Replacement for	W	lm	lm/W	K	L80[2]	°		L × W × H [mm] Ø × H [mm]
NEW	LN INV DI 1200 P 54W 930 DAVR WT	4099854**135552**	**3361400**	2 × 36 W FL	54	6500	120	3000	70000	90 + 130	DALI-2/IoT	1210 × 125 × 43
NEW	LN INV DI 1200 P 54W 940 DAVR WT	4099854**135576**	**3361401**	2 × 36 W FL	54	6950	129	4000	70000	90 + 130	DALI-2/IoT	1210 × 125 × 43
NEW	LN INV DI 1500 P 69W 930 DAVR WT	4099854**135637**	**3361404**	2 × 58 W FL	69	8150	118	3000	70000	90 + 130	DALI-2/IoT	1475 × 125 × 43
NEW	LN INV DI 1500 P 69W 940 DAVR WT	4099854**135651**	**3361405**	2 × 58 W FL	69	8700	126	4000	70000	90 + 130	DALI-2/IoT	1475 × 125 × 43

[1] Refer to www.ledvance.com/guarantee for precise conditions
[2] t[h]: L70/B50 @ 25 °C (Ta)/t[h]: L80/B10 @ 25 °C (Ta)
[3] All luminaires support DALI-2 Energy Data (DALI part 252) and DALI-2 Diagnostic Data (DALI part 253).

LINEAR INDIVILED DIRECT GEN 2

Surface luminaires with EVERLOOP design for a sustainable and convenient upgrade of light source and driver

PRODUCT FEATURES

- Minimalistic LEDVANCE SCALE design in extruded aluminum housing
- Includes EVERLOOP: Convenient replacement of light source and LED driver
- Linkable into seamless light line with accessories (surface or pendant mounting)
- Pendant mounting with suspension kit (to be ordered separately)
- Available in 2 versions: with on/off driver and with DALI 2.0 IoT driver

PRODUCT BENEFITS

- Easy upgradability of light source and driver (EVERLOOP design)
- Homogenous light distribution and reduced glare (UGR ≤ 19) thanks to IndiviLED® optics
- High performance with CRI90 and up to 130 lm/W
- Highly versatile due to selectable power steps (Power Select – PS) on the driver
- Easy installation

AREAS OF APPLICATION

- Direct replacement for luminaires with fluorescent lamps
- Offices, education, public buildings.
- Single and continuous line configuration
- Direct lighting

EQUIPMENT / ACCESSORIES

- Suspension kit available for pendant luminaire version (to be ordered separately)
- Inline, corner and infill connectors available as separate accessory
- Through-wiring cable kit available

FURTHER PRODUCT DETAILS

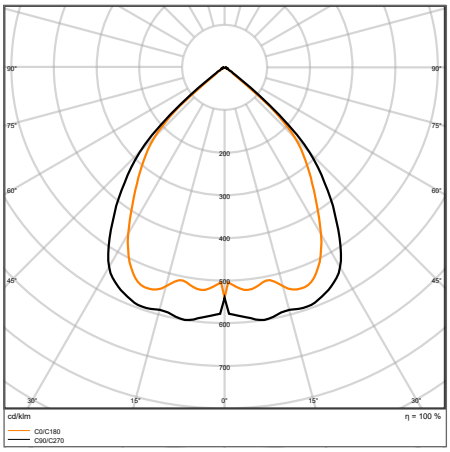

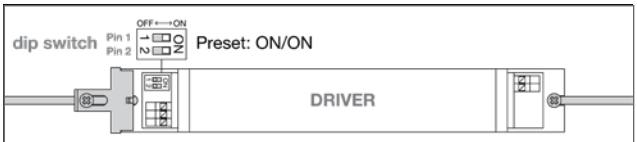

LINEAR IndiviLED® DIRECT	DRIVER	dip switch			mA	W	lm	lm/W
		Pin 1	Pin 2	Preset				
LN INV D 1200 P 40W 930 PS WT	OSRAM IT FIT 40/220...240/800 CS L	OFF	OFF	–	500	25	3150	126
		OFF	ON	–	600	30	3700	123
		ON	OFF	–	700	36	4400	122
		ON	ON	Preset	800	40	4800	120
LN INV D 1200 P 40W 940 PS WT	OSRAM IT FIT 40/220...240/800 CS L	OFF	OFF	–	500	25	3250	130
		OFF	ON	–	600	30	3900	130
		ON	OFF	–	700	36	4600	128
		ON	ON	Preset	800	40	5050	126
LN INV D 1500 P 52W 930 PS WT	OSRAM OT FIT 55W CS L AP_V3.2	OFF	OFF	–	800	40	4850	121
		OFF	ON	–	900	46	5450	118
		ON	OFF	–	975	48	5650	118
		ON	ON	Preset	1050	52	6050	116
LN INV D 1500 P 52W 940 PS WT	OSRAM OT FIT 55W CS L AP_V3.2	OFF	OFF	–	800	40	5200	130
		OFF	ON	–	900	46	5900	128
		ON	OFF	–	975	48	6100	127
		ON	ON	Preset	1050	52	6550	126

LN INV D 1200 P 40W 940 PS WT

The pictures shown in the catalog are for illustration purposes only. For information on size and color, please refer to the product table.

LINEAR INDIVILED DIRECT GEN 2 PS

Surface mounted luminaire for single or light line office application with CRI90 and power select (PS) feature

PERFORMANCE CLASS | W/W | FLICKER VALUE <5% | UGR <19 | CRI >90 | IP20 | LEDVANCE 5 year guarantee[1]

	Product name	EAN (GTIN)	El.nr.	Replacement for	W	lm	lm/W	K	L80[2]	°	L × W × H [mm] Ø × H [mm]
NEW	LN INV D 1200 P 40W 930 PS WT	4099854**135316**	**3361406**	2 × 36 W FL	40	4800	120	3000	70000	90	1210 × 125 × 43
NEW	LN INV D 1200 P 40W 940 PS WT	4099854**135330**	**3361407**	2 × 36 W FL	40	5050	126	4000	70000	90	1210 × 125 × 43
NEW	LN INV D 1500 P 52W 930 PS WT	4099854**135477**	**3361414**	2 × 58 W FL	52	6050	116	3000	70000	90	1475 × 125 × 43
NEW	LN INV D 1500 P 52W 940 PS WT	4099854**135491**	**3361415**	2 × 58 W FL	52	6550	126	4000	70000	90	1475 × 125 × 43

LINEAR INDIVILED DIRECT GEN 2 DALI

Surface mounted luminaire for single or light line office application with CRI90 and DALI-2 IoT technology

PERFORMANCE CLASS | VIVA RES | IoT READY[3] | FLICKER VALUE <5% | UGR <19 | CRI >90 | IP20 | LEDVANCE 5 year guarantee[1]

	Product name	EAN (GTIN)	El.nr.	Replacement for	W	lm	lm/W	K	L80[2]	°		L × W × H [mm] Ø × H [mm]
NEW	LN INV D 1200 P 40W 930 DAVR WT	4099854**135712**	**3361410**	2 × 36 W FL	40	4800	120	3000	70000	90	DALI-2/IoT	1210 × 125 × 43
NEW	LN INV D 1200 P 40W 940 DAVR WT	4099854**135736**	**3361411**	2 × 36 W FL	40	5050	126	4000	70000	90	DALI-2/IoT	1210 × 125 × 43
NEW	LN INV D 1500 P 52W 930 DAVR WT	4099854**136047**	**3361416**	2 × 58 W FL	52	6100	117	3000	70000	90	DALI-2/IoT	1475 × 125 × 43
NEW	LN INV D 1500 P 52W 940 DAVR WT	4099854**136061**	**3361417**	2 × 58 W FL	52	6400	123	4000	70000	90	DALI-2/IoT	1475 × 125 × 43

[1] Refer to www.ledvance.com/guarantee for precise conditions
[2] t[h]: L70/B50 @ 25 °C (Ta)/t[h]: L80/B10 @ 25 °C (Ta)
[3] All luminaires support DALI-2 Energy Data (DALI part 252) and DALI-2 Diagnostic Data (DALI part 253).

LINEAR INDIVILED ACCESSORIES GEN 2

Mounting accessories for LINEAR INDIVILED GEN 2 luminaires

1

2

3

4

5

6

Suspension Kit:
- Complete suspension kit (ceiling connection box, push fit terminal, 2 suspension wires, transparent cable)

Suspension Wire:
- Adjustable suspension wire: 1 × Y wire suspension 1.5 m

Inline Connector:
- Mechanical H connector made of metal sheet with stainless steel M4 screws for light line connection

Corner Connector:
- Mechanical and electric connector (profile, 5 × 2.5 mm² internal wiring and terminal plug, male-female AC plug)

Infill 600 / 1 200 / 1 500:
- Mechanical and electric connector (profile, 5 × 2.5 mm² internal wiring and terminal plug, male-female AC plug)

Throughwiring Kit 1 200 / 1 500:
- Through wiring cable kit for light lines (5 × 2.5 mm² internal wiring and terminal plug, male/female AC plug)

LEDVANCE 2 year guarantee [1]

	Product name	EAN (GTIN)	El.nr.	L × W × H [mm] Ø × H [mm]	MATERIAL	COLOR		No.
NEW	LN INV SUSPENSION KIT WT	4099854**215537**	**3361418**	120 × 40 × 1500	Steel	White	1	1
NEW	LN INV SUSPENSION WIRE	4099854**215551**	**3361419**	11 × 1500	Copper	Silver	2	2
NEW	LN INV INLINE CONNECTOR	4099854**215612**	**3361420**	100 × 122 × 27	Steel	Silver	1	3
NEW	LN INV CORNER CONNECTOR WT	4099854**214905**	**3361423**	350 × 350 × 43	Steel	White	2	4
NEW	LN INV INFILL 600 WT	4099854**214882**	**3361424**	700 × 125 × 43	Aluminum	White	1	5
NEW	LN INV INFILL 1200 WT	4099854**214868**	**3361425**	1300 × 125 × 43	Aluminum	White	1	5
NEW	LN INV INFILL 1500 WT	4099854**214844**	**3361426**	1600 × 125 × 43	Aluminum	White	1	5
NEW	LN INV 1200 THROUGHWIRING KIT	4099854**214820**	**3361421**	1430 × 28 × 14	Polycarbonate (PC)	Yellow	1	6
NEW	LN INV 1500 THROUGHWIRING KIT	4099854**214806**	**3361422**	1720 × 28 × 14	Polycarbonate (PC)	Yellow	1	6

[1] Refer to www.ledvance.com/guarantee for precise conditions
The pictures shown in the catalog are for illustration purposes only. For information on size and color, please refer to the product table.

OUR CHECKLIST FOR YOUR LINEAR INDIVILED GEN 2 SYSTEM

Typical installation: We have put together for you all the necessary components for suspended installation of four luminaires as strip lighting in a corner configuration. For more information see the operating instructions for Linear IndiviLED Gen 2.

The through-wiring must be fitted by an installer.

CORNER INSTALLATION OF 4 × LINEAR INDIVILED GEN 2

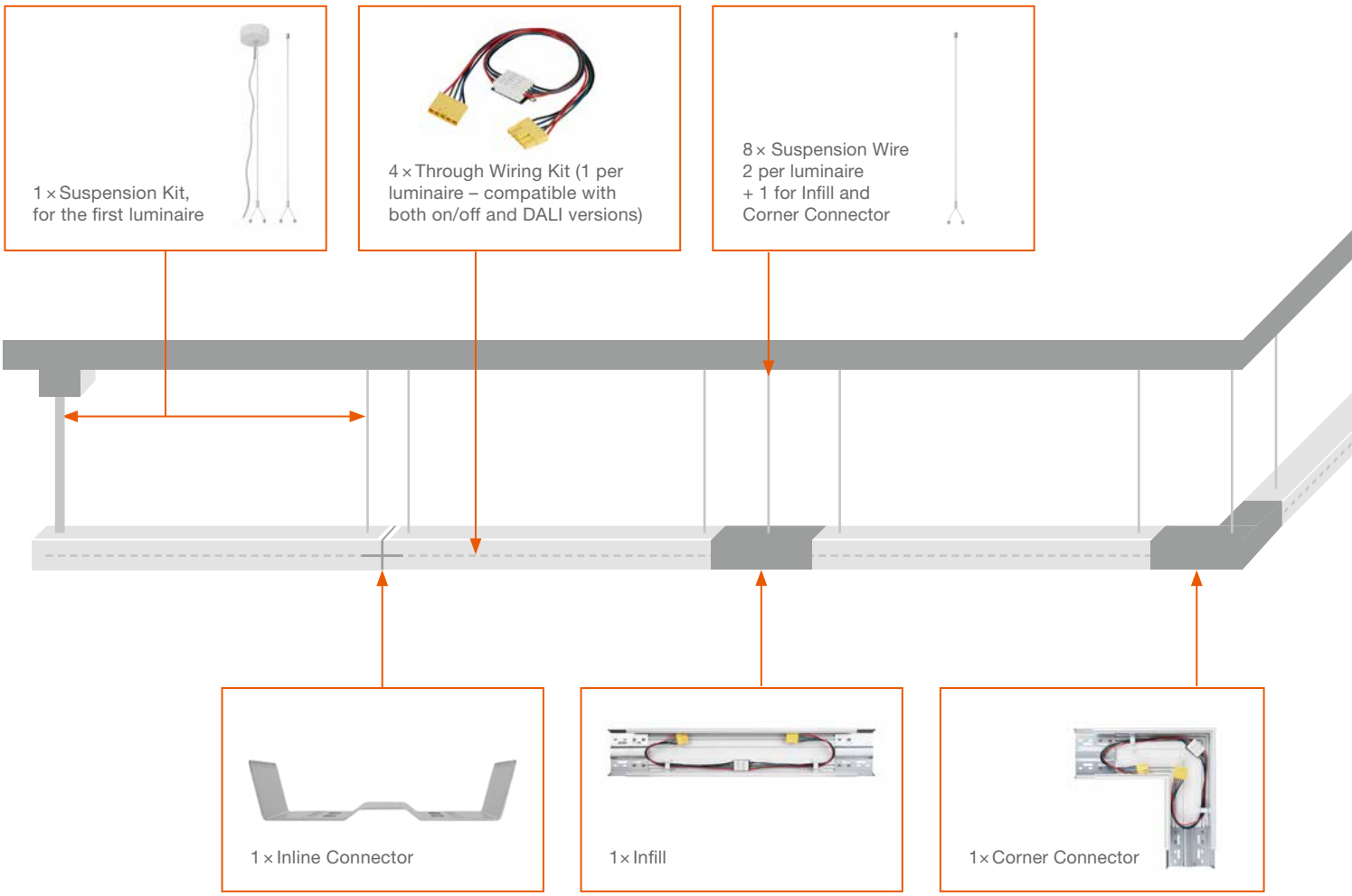

ORDER LIST

- 4 × Linear IndiviLED Luminaire
- 1 × Inline Connector
- 1 × Infill
- 1 × Corner Connector
- 4 × Through Wiring Kit
- 1 × Suspension Kit
- 8 × Suspension Wire

PANEL DIRECT/INDIRECT

Suspended edge-lit luminaires for direct and indirect light emission, low glare UGR < 19

PRODUCT FEATURES

- Very slim aluminum housing
- Rectangular (1 200 mm × 300 mm) stand-alone luminaires with direct (70 %) and indirect (30 %) light emission
- Steel cable suspension, length: 1.5 m
- Lifetime (L70/B50): up to 50 000 h (at 25 °C)
- IoT-ready versions with DALI-2.0 driver or Zigbee 3.0 technology

PRODUCT BENEFITS

- Functional SCALE design luminaire for office applications (driver integrated in the ceiling rose)
- Special directional light design and PMMA diffuser for homogeneous, low-glare lighting (UGR < 19)
- Low flicker light thanks to special electronic control gear
- Comfortable light and high color consistency SDCM ≤ 3
- 5 years guarantee

AREAS OF APPLICATION

- Efficient replacement for traditional T8 and T5 luminaires
- Offices
- Meeting rooms
- Conference rooms
- Reception areas and foyers

EQUIPMENT / ACCESSORIES

- Suspension kit included

FURTHER PRODUCT DETAILS

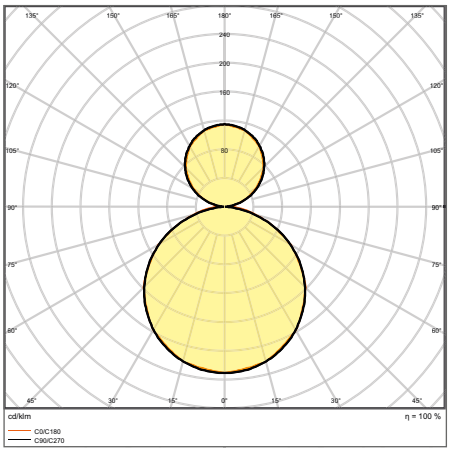

PANEL D/I 1200 UGR 19 36 W 4000 K

The pictures shown in the catalog are for illustration purposes only. For information on size and color, please refer to the product table.

PANEL DIRECT/INDIRECT

Suspended edge-lit luminaires for direct and indirect light emission, low glare UGR < 19

PERFORMANCE CLASS | VIVA RES | IoT READY [1] | EN EC | TÜV SÜD | FLICKER VALUE < 10 % [2] | UGR < 19 [3] | CRI ≥ 80 | IP 20 | LEDVANCE 5 year guarantee [4]

Product name	EAN (GTIN)	El.nr.	Replacement for	W	lm	lm/W	K	L80 [5]	°		L × W × H [mm] Ø × H [mm]
PANEL D/I 1200 UGR 19 36 W 3000 K	4058075**144606**	**3000676**	2 × 58 W FL	36	3800	100	3000	60000	110	—	1200 × 300 × 16
PANEL D/I 1200 UGR 19 36 W 4000 K	4058075**144620**	**3000677**	2 × 58 W FL	36	4000	110	4000	60000	110	—	1200 × 300 × 16
PANEL D/I 1200 UGR 19 36 W 3000 K DALI	4058075**504028**	**3004831**	2 × 58 W FL	36	3800	105	3000	60000	110	DALI-2/IoT	1200 × 300 × 16
PANEL D/I 1200 UGR 19 36 W 4000 K DALI	4058075**504042**	**3004832**	2 × 58 W FL	36	4000	110	4000	60000	110	DALI-2/IoT	1200 × 300 × 16
PANEL D-I 1200 36 W-4000 K UGR19 ZBVR	4058075**521889**	**3004803**	2 × 58 W FL	36	4000	110	4000	60000	110	Zigbee 3.0	1200 × 300 × 16

[1] All DALI and Zigbee luminaires support DALI-2 Energy Data (DALI part 252) and DALI-2 Diagnostic Data (DALI part 253).
[2] Flicker value < 5 % for DALI versions
[3] On/Off versions are exempt
[4] Refer to www.ledvance.com/guarantee for precise conditions
[5] t[h]: L70 / B50 @ 25 °C (T_a) / t[h]: L80 / B10 @ 25 °C (T_a)

LINEAR LUMINAIRES

HIGH LEVELS OF COMFORT AND FLEXIBILITY

LINEAR SURFACE IP44 GEN 2

PERFOR-MANCE CLASS

Page 128

LINEAR SURFACE IP44
LINEAR SURFACE IP44 DALI
LINEAR SURFACE IP44 EM

IDEAL FOR SPECIAL APPLICATIONS WITH A HIGH DEGREE OF PROTECTION

- Robust IP44 and IK08 luminaire with integrated driver for surface and pendant mounting
- Replacement for traditional 2/14 W, 2/28 W, and 2/49 W versions
- Also available with 3-hour single battery on request (please note longer delivery time)

LINEAR ULTRA OUTPUT

PERFOR-MANCE CLASS

Page 130

LINEAR ULTRA OUTPUT
LINEAR ULTRA OUTPUT EMERGENCY

EXCELLENT LIGHT OUTPUT

- Replacement of conventional T8 luminaires: equivalent to 1/36 W, 2/36 W, 1/58 W, 2/58 W and 2 × 80 W depending on the version
- Robust housing with IK08
- Easy and time saving installation

LINEAR COMPACT

VALUE CLASS

Page 132

LINEAR COMPACT SWITCH
LINEAR COMPACT HIGH OUTPUT
LINEAR COMPACT BATTEN

COMPACT AND VERSATILE

- Flexible strip lighting versions possible, plug-in (HIGH OUTPUT and SWITCH) or with wiring (BATTEN)
- Many options for fast and flexible mounting through extensive accessories
- High luminous flux of up to 2 500 lm

LINEAR MAGNETIC BATTEN T5

Page 134

LED LUMINAIRE INSERT: SIMPLY BRILLIANT

- Replacement-kit for modernizing existing metallic ceiling lights (T8 and T5 fluorescent tubes) to energy-saving LED technology
- Certified “Luminaire-in-a-Luminaire”
- Easy Mounting (hands-free, over-head) thanks to strong magnets and tool-free electrical connection

WHICH LUMINAIRE IS SUITABLE FOR WHICH APPLICATION?

LINEAR SURFACE IP44 GEN 2

General lighting and special applications requiring a high degree of protection

LINEAR ULTRA OUTPUT

Industry, general lighting

LINEAR COMPACT

Cove lighting, shop and hospitality

LINEAR MAGNETIC BATTEN T5

Refurbishment of old T8 (and T5) fluorescent luminaires

LINEAR SURFACE IP44 GEN 2

Robust IP44 luminaires with direct light emission and integrated driver for surface applications, up to 137 lm/W

PRODUCT FEATURES

- Surface mounted luminaires with direct light emission
- Type of protection: IP44
- Impact resistance: IK08
- Available in 3 different lengths: 600 mm, 1 200 mm and 1 500 mm
- High luminous efficacy: up to 137 lm/W
- Through-wiring cable already installed
- DALI and self-contained emergency versions also available

PRODUCT BENEFITS

- Low maintenance and low operational costs
- Cable entry on the back of the luminaire and on each end-caps for easy electrical connection
- Easy and quick installation
- Low flicker light thanks to special electronic control gear
- 5 years guarantee

AREAS OF APPLICATION

- Efficient replacement for traditional T8 and T5 luminaires
- Public buildings
- General illumination
- Libraries, schools

EQUIPMENT / ACCESSORIES

- Equipped with through-wiring cables and connectors
- Tool-free cable strain reliefs included

FURTHER PRODUCT DETAILS

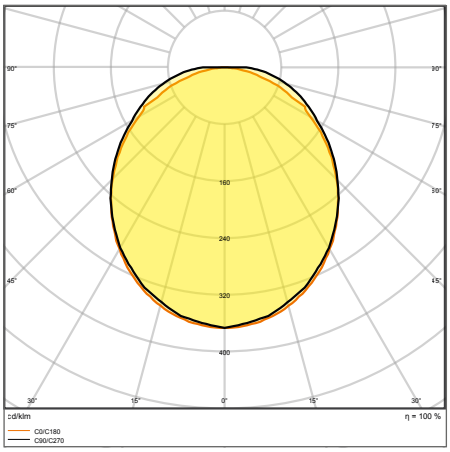

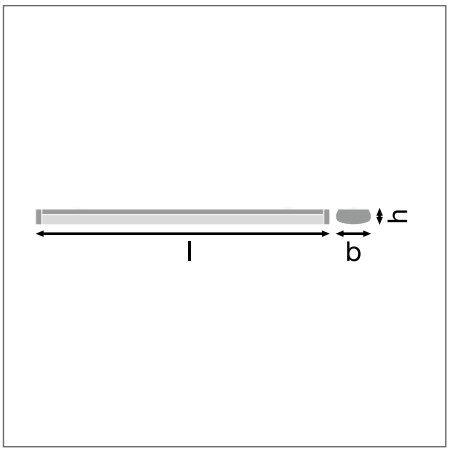

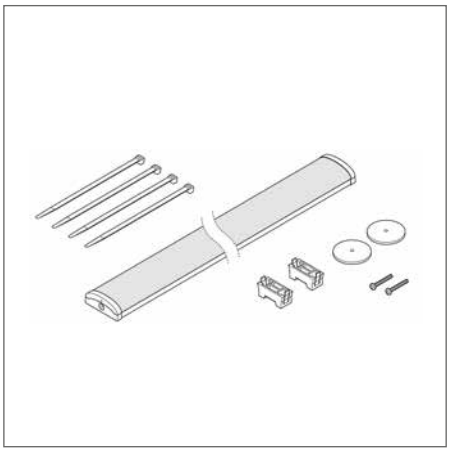

LN SF 1200 P 32W 840 WT IP44

The pictures shown in the catalog are for illustration purposes only. For information on size and color, please refer to the product table.

LINEAR SURFACE IP44 GEN 2/ LINEAR SURFACE IP44 DALI

Robust IP44 luminaires with direct light emission and integrated driver for surface applications, up to 137 lm/W

PERFORMANCE CLASS

FLICKER VALUE <5% | CRI >80 | IP44 | LEDVANCE 5 year guarantee[1]

Product name	EAN (GTIN)	El.nr.	Replacement for	W	lm	lm/W	K	L80[2]	°		L × W × H [mm] Ø × H [mm]
LN SF 600 P 18W 830 WT IP44	4058075**733152**	**3310232**	2 × 14 W FL	18	2250	125	3000	70000	110	—	608 × 166 × 63
LN SF 600 P 18W 840 WT IP44	4058075**733091**	**3310229**	2 × 14 W FL	18	2430	135	4000	70000	110	—	608 × 166 × 63
LN SF 1200 P 32W 830 WT IP44	4058075**733176**	**3310233**	2 × 28 W FL	32	4160	130	3000	70000	110	—	1176 × 166 × 63
LN SF 1200 P 32W 840 WT IP44	4058075**733114**	**3310230**	2 × 28 W FL	32	4384	137	4000	70000	110	—	1176 × 166 × 63
LN SF 1500 P 45W 830 WT IP44	4058075**733190**	**3310234**	2 × 49 W FL	45	5850	130	3000	70000	110	—	1476 × 166 × 63
LN SF 1500 P 45W 840 WT IP44	4058075**733138**	**3310231**	2 × 49 W FL	45	6165	137	4000	70000	110	—	1476 × 166 × 63
LN SF 600 P 18W 830 WT IP44 DALI	4058075**733398**	**3304060**	2 × 14 W FL	18	2340	130	3000	70000	110	DALI-2	608 × 166 × 63
LN SF 600 P 18W 840 WT IP44 DALI	4058075**733336**	—	2 × 14 W FL	18	2466	137	4000	70000	110	DALI-2	608 × 166 × 63
LN SF 1200 P 32W 830 WT IP44 DALI	4058075**733411**	**3310284**	2 × 28 W FL	32	4160	130	3000	70000	110	DALI-2	1176 × 166 × 63
LN SF 1200 P 32W 840 WT IP44 DALI	4058075**733350**	—	2 × 28 W FL	32	4384	137	4000	70000	110	DALI-2	1176 × 166 × 63
LN SF 1500 P 45W 830 WT IP44 DALI	4058075**733435**	**3310285**	2 × 49 W FL	45	5850	130	3000	70000	110	DALI-2	1476 × 166 × 63
LN SF 1500 P 45W 840 WT IP44 DALI	4058075**733374**	—	2 × 49 W FL	45	6165	137	4000	70000	110	DALI-2	1476 × 166 × 63

LINEAR SURFACE IP44 EMERGENCY

Robust IP44 luminaires with direct light emission, integrated driver and integrated emergency lighting function, up to 137 lm/W

PERFORMANCE CLASS

FLICKER VALUE <5% | CRI >80 | IP44 | LEDVANCE 3 year guarantee[1]

Product name	EAN (GTIN)	El.nr.	Replacement for	W	lm	lm/W	K	L80[2]	°	L × W × H [mm] Ø × H [mm]
LN SF 600 P 18W 830 WT IP44 EM	4058075**733275**	**3316065**	2 × 14 W FL	18	2250	125	3000	70000	110	608 × 166 × 63
LN SF 600 P 18W 840 WT IP44 EM	4058075**733213**	**3316062**	2 × 14 W FL	18	2430	135	4000	70000	110	608 × 166 × 63
LN SF 1200 P 32W 830 WT IP44 EM	4058075**733299**	**3316066**	2 × 28 W FL	32	4160	130	3000	70000	110	1176 × 166 × 63
LN SF 1200 P 32W 840 WT IP44 EM	4058075**733237**	**3316063**	2 × 28 W FL	32	4384	137	4000	70000	110	1176 × 166 × 63
LN SF 1500 P 45W 830 WT IP44 EM	4058075**733312**	**3316067**	2 × 49 W FL	45	5850	130	3000	70000	110	1476 × 166 × 63
LN SF 1500 P 45W 840 WT IP44 EM	4058075**733251**	**3316064**	2 × 49 W FL	45	6165	137	4000	70000	110	1476 × 166 × 63

EMERGENCY LIGHTING PROPERTIES

Product name	Battery life in emergency operation mode	Type of emergency operation test	Type of emergency light operation	Luminous flux in emergency operation mode	Type of Battery
LN SF 600 P 18W 830 WT IP44 EM	3 h	Automatic	Maintained/Non-maintained	340 lm	LiFePO4
LN SF 600 P 18W 840 WT IP44 EM	3 h	Automatic	Maintained/Non-maintained	340 lm	LiFePO4
LN SF 1200 P 32W 830 WT IP44 EM	3 h	Automatic	Maintained/Non-maintained	340 lm	LiFePO4
LN SF 1200 P 32W 840 WT IP44 EM	3 h	Automatic	Maintained/Non-maintained	340 lm	LiFePO4
LN SF 1500 P 45W 830 WT IP44 EM	3 h	Automatic	Maintained/Non-maintained	340 lm	LiFePO4
LN SF 1500 P 45W 840 WT IP44 EM	3 h	Automatic	Maintained/Non-maintained	340 lm	LiFePO4

[1] Refer to www.ledvance.com/guarantee for precise conditions
[2] t[h]: L70/B50 @ 25 °C (T_a)/t[h]: L80/B10 @ 25 °C (T_a)

LINEAR ULTRA OUTPUT

Surface luminaire with high lumen output and high luminous efficacy

PRODUCT FEATURES

- Housing made of robust white sheet steel, end cap and opal diffuser made of polycarbonate (PC)
- Versions with luminous flux between 3 500 and 7 100 lm available
- Very high luminous efficacy: up to 125 lm/W
- Through-wiring possible
- Tool-free installation by push button terminal and simple click system of the diffuser

PRODUCT BENEFITS

- Replacement of conventional T8 luminaires: equivalent to 2/36 W, 1/58 W, 2/58 W and 2 × 80 W
- Robust structure with IK08
- Energy savings of up to 60 % compared to luminaires that use CFL
- 5 years guarantee

AREAS OF APPLICATION

- Direct replacement for luminaires with fluorescent lamps
- Indoor applications
- Industrial and commercial halls
- Public areas
- Corridors, stairwells, basements

EQUIPMENT / ACCESSORIES

- Mounting screws and dowels included

FURTHER PRODUCT DETAILS

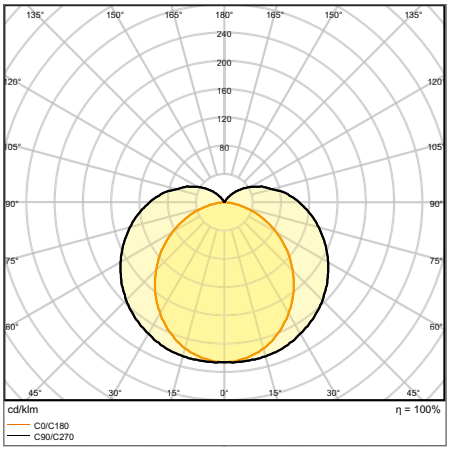

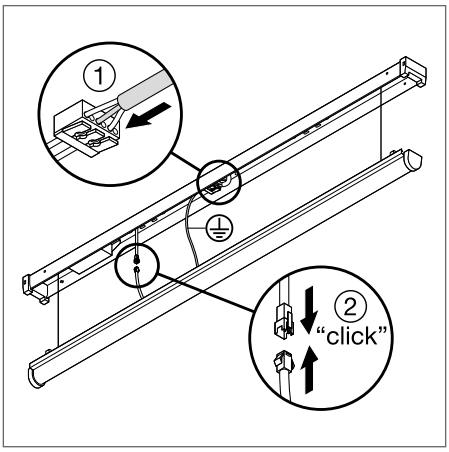

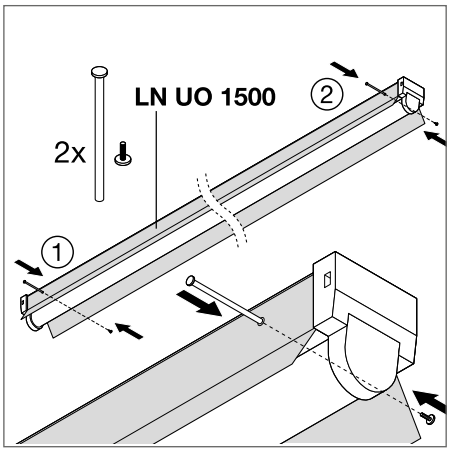

LN UO 1500 60 W 4000 K

The pictures shown in the catalog are for illustration purposes only. For information on size and color, please refer to the product table.

LINEAR ULTRA OUTPUT

Surface luminaire with high luminous flux

PERFOR-MANCE CLASS

CRI ≥80 | IP20 | LEDVANCE 5 year guarantee[1]

Product name	EAN (GTIN)	El.nr.	Replacement for	W	lm	lm/W	K	L70[2]	∠°	L × W × H [mm] Ø × H [mm]
LN UO 1200 25 W 4000 K	4058075**479951**	**3202846**	—	25	2950	120	4000	50000	110	1168 × 62 × 74
LN UO 1200 33 W 3000 K	4058075**122147**	**3203412**	2 × 36 W FL	33	3700	110	3000	50000	110	1168 × 62 × 74
LN UO 1200 33 W 4000 K	4058075**122161**	**3203413**	2 × 36 W FL	33	4000	120	4000	50000	110	1168 × 62 × 74
LN UO 1500 30 W 4000 K	4058075**122208**	**3203415**	1 × 58 W FL	30	3800	125	4000	50000	110	1458 × 62 × 74
LN UO 1500 46 W 3000 K	4058075**122222**	**3203416**	2 × 58 W FL	46	5000	110	3000	50000	110	1458 × 62 × 74
LN UO 1500 46 W 4000 K	4058075**122246**	**3203417**	2 × 58 W FL	46	5500	120	4000	50000	110	1458 × 62 × 74
LN UO 1500 60 W 4000 K	4058075**122284**	**3203419**	2 × 80 W FL	60	7100	120	4000	50000	110	1458 × 62 × 74

LINEAR ULTRA OUTPUT EMERGENCY

Surface luminaire with high luminous flux and integrated emergency lighting function

PERFOR-MANCE CLASS

CRI ≥80 | IP20 | LEDVANCE 5 year guarantee[1]

Product name	EAN (GTIN)	El.nr.	Replacement for	W	lm	lm/W	K	L70[2]	∠°	L × W × H [mm] Ø × H [mm]
LN UO EM 1200 25 W 4000 K	4058075**515222**	—	1 × 36 W FL	25	2950	120	4000	50000	120	1168 × 62 × 74
LN UO EM 1200 33 W 3000 K	4058075**515246**	—	2 × 36 W FL	33	3700	110	3000	50000	120	1168 × 62 × 74
LN UO EM 1200 33 W 4000 K	4058075**515260**	—	2 × 36 W FL	33	4000	120	4000	50000	120	1168 × 62 × 74
LN UO EM 1500 30 W 4000 K	4058075**515307**	—	1 × 58 W FL	30	3800	240	4000	50000	120	1458 × 62 × 74
LN UO EM 1500 46 W 3000 K	4058075**515321**	—	2 × 58 W FL	46	5000	110	3000	50000	120	1458 × 62 × 74
LN UO EM 1500 46 W 4000 K	4058075**515352**	—	2 × 58 W FL	46	5500	120	4000	50000	120	1458 × 62 × 74
LN UO EM 1500 60 W 4000 K	4058075**515390**	—	2 × 80 W FL	60	7100	120	4000	50000	120	1458 × 62 × 74

EMERGENCY LIGHTING PROPERTIES

Product name	Battery life in emergency operation mode	Type of emergency operation test	Type of emergency light operation	Luminous flux in emergency operation mode	Type of Battery
LN UO EM 1200 25 W 4000 K	3 h	Automatic	Maintained/Non-maintained	370 lm	LiFePO4
LN UO EM 1200 33 W 3000 K	3 h	Automatic	Maintained/Non-maintained	370 lm	LiFePO4
LN UO EM 1200 33 W 4000 K	3 h	Automatic	Maintained/Non-maintained	370 lm	LiFePO4
LN UO EM 1500 30 W 4000 K	3 h	Automatic	Maintained/Non-maintained	370 lm	LiFePO4
LN UO EM 1500 46 W 3000 K	3 h	Automatic	Maintained/Non-maintained	370 lm	LiFePO4
LN UO EM 1500 46 W 4000 K	3 h	Automatic	Maintained/Non-maintained	370 lm	LiFePO4
LN UO EM 1500 60 W 4000 K	3 h	Automatic	Maintained/Non-maintained	370 lm	LiFePO

[1] Refer to www.ledvance.com/guarantee for precise conditions
[2] t[h]: L70/B50 @ 25 °C (T_a)/t[h]: L80/B10 @ 25 °C (T_a)

LINEAR COMPACT

Compact single or light line luminaire

PRODUCT FEATURES

- Housing made of durable polycarbonate
- High Output and Switch: fast and seamless connection up to a maximum of 10 luminaires per strip
- Batten: lighting strip with connection via the rear of the luminaire with up to 60 luminaires
- Up to 4 different lengths available
- Glow Wire Test according to IEC 60695-2-12: 850 °C

PRODUCT BENEFITS

- Flexible strip lighting versions possible, plug-in (High Output and Switch) or with wiring (Batten)
- Many options for fast and flexible mounting through extensive accessories
- High luminous flux up to 2 500 lm
- Low flicker light thanks to special electronic control gear
- 5 years guarantee

AREAS OF APPLICATION

- Direct replacement for luminaires with fluorescent lamps
- Indoor applications
- Accent lighting
- Public areas

EQUIPMENT / ACCESSORIES

- Equipped with power plug, cable connector and line adapter for connecting further luminaires*
- Mounting material for wall and ceiling installations included

FURTHER PRODUCT DETAILS

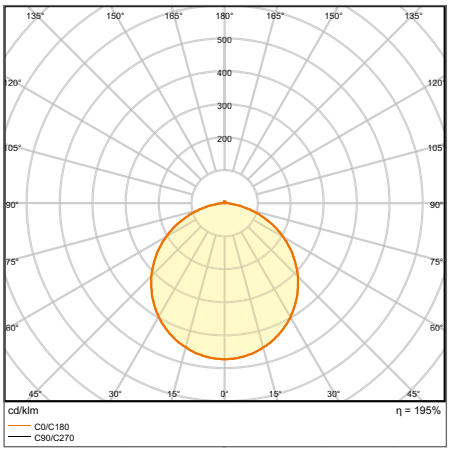

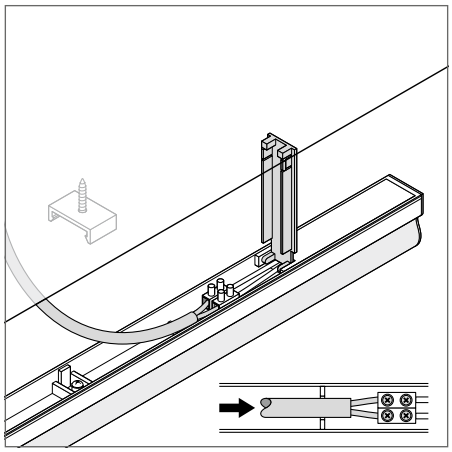

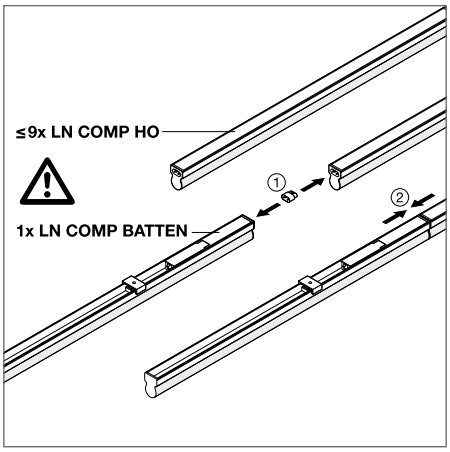

LN COMP Batten 1500 25 W 3000 K

*Applies only to Linear Compact HO and Switch
The pictures shown in the catalog are for illustration purposes only. For information on size and color, please refer to the product table.

LINEAR COMPACT SWITCH

Compact single or light line luminaire with switch

VALUE CLASS

TÜV SÜD | FLICKER VALUE <5% | CRI >80 | IP20 | LEDVANCE 5 year guarantee [1]

Product name	EAN (GTIN)	El.nr.	Replacement for	W	lm	lm/W	K	L70 [2]	°	L × W × H [mm] Ø × H [mm]
LN COMP SWITCH 300 4 W 3000 K	4058075**106079**	**3241019**	1 × 9 W FL	4	400	100	3000	50000	140	313 × 28 × 36
LN COMP SWITCH 300 4 W 4000 K	4058075**106093**	**3241020**	1 × 9 W FL	4	450	110	4000	50000	140	313 × 28 × 36
LN COMP SWITCH 600 8 W 3000 K	4058075**106116**	**3241021**	1 × 18 W FL	8	800	100	3000	50000	140	573 × 28 × 36
LN COMP SWITCH 600 8 W 4000 K	4058075**106130**	**3241022**	1 × 18 W FL	8	800	100	4000	50000	140	573 × 28 × 36
LN COMP SWITCH 900 12 W 3000 K	4058075**106192**	**3206968**	1 × 30 W FL	12	1200	100	3000	50000	140	873 × 28 × 36
LN COMP SWITCH 900 12 W 4000 K	4058075**106215**	**3206969**	1 × 30 W FL	12	1200	100	4000	50000	140	873 × 28 × 36
LN COMP SWITCH 1200 14 W 3000 K	4058075**106154**	**3241017**	1 × 36 W FL	14	1400	100	3000	50000	140	1173 × 28 × 36
LN COMP SWITCH 1200 14 W 4000 K	4058075**106178**	**3241018**	1 × 36 W FL	14	1500	100	4000	50000	140	1173 × 28 × 36
LN COMP SWITCH 1500 17W/3000K	4058075**683341**	**3311418**	1 × 36 W FL	17	1800	106	3000	50000	140	1473 × 28 × 36
LN COMP SWITCH 1500 17W/4000K	4058075**683365**	**3311419**	1 × 36 W FL	17	1900	112	4000	50000	140	1473 × 28 × 36

LINEAR COMPACT HIGH OUTPUT

Compact single or light line luminaire with high luminous flux

VALUE CLASS

TÜV SÜD | CRI >80 | IP20 | LEDVANCE 5 year guarantee [1]

Product name	EAN (GTIN)	El.nr.	Replacement for	W	lm	lm/W	K	L70 [2]	°	L × W × H [mm] Ø × H [mm]
LN COMP HO 600 10 W 3000 K	4058075**106277**	**3241027**	1 × 18 W FL	10	1000	100	3000	50000	140	573 × 24 × 36
LN COMP HO 600 10 W 4000 K	4058075**106291**	**3241028**	1 × 18 W FL	10	1000	100	4000	50000	140	573 × 24 × 36
LN COMP HO 900 15 W 3000 K	4058075**106239**	**3206970**	1 × 30 W FL	15	1500	100	3000	50000	140	873 × 24 × 36
LN COMP HO 900 15 W 4000 K	4058075**106253**	**3206971**	1 × 30 W FL	15	1500	100	4000	50000	140	873 × 24 × 36
LN COMP HO 1200 20 W 3000 K	4058075**106314**	**3241023**	1 × 36 W FL	20	2000	100	3000	50000	140	1173 × 24 × 36
LN COMP HO 1200 20 W 4000 K	4058075**106338**	**3241024**	1 × 36 W FL	20	2000	100	4000	50000	140	1173 × 24 × 36
LN COMP HO 1500 25 W 3000 K	4058075**106352**	**3241025**	1 × 58 W FL	25	2500	100	3000	50000	140	1473 × 24 × 36
LN COMP HO 1500 25 W 4000 K	4058075**106376**	**3241026**	1 × 58 W FL	25	2500	100	4000	50000	140	1473 × 24 × 36

LINEAR COMPACT BATTEN

Compact luminaires with a wiring on the back side

VALUE CLASS

TÜV SÜD | CRI >80 | IP20 | LEDVANCE 5 year guarantee [1]

Product name	EAN (GTIN)	El.nr.	Replacement for	W	lm	lm/W	K	L70 [2]	°	L × W × H [mm] Ø × H [mm]
LN COMP Batten 600 10 W 3000 K	4058075**099692**	**3203420**	1 × 18 W FL	10	1000	100	3000	50000	140	575 × 27 × 38
LN COMP Batten 600 10 W 4000 K	4058075**099715**	**3203421**	1 × 18 W FL	10	1000	100	4000	50000	140	575 × 27 × 38
LN COMP Batten 1200 20 W 3000 K	4058075**099739**	**3203422**	1 × 36 W FL	20	2000	100	3000	50000	140	1175 × 27 × 38
LN COMP Batten 1200 20 W 4000 K	4058075**099753**	**3203423**	1 × 36 W FL	20	2000	100	4000	50000	140	1175 × 27 × 38
LN COMP Batten 1500 25 W 3000 K	4058075**099777**	**3203424**	1 × 58 W FL	25	2500	100	3000	50000	140	1475 × 27 × 38
LN COMP Batten 1500 25 W 4000 K	4058075**099791**	**3203425**	1 × 58 W FL	25	2500	100	4000	50000	140	1475 × 27 × 38

[1] Refer to www.ledvance.com/guarantee for precise conditions | [2] t[h]: L70 / B50 @ 25 °C (T_a) / t[h]: L80 / B10 @ 25 °C (T_a)

LINEAR MAGNETIC BATTEN T5
THE LUMINAIRE IN THE LUMINAIRE

Our portfolio of matching LED TUBE T5 AC find at:
ledvance.com/tubes

If the luminaire cannot be removed from the ceiling, or if the customer does not dare to do a CONVERSION due to CE-conformity constrains, then a "luminaire-in-a-luminaire" UPGRADE is the solution.

Make new from old: LINEAR MAGNETIC BATTEN T5 is an innovative luminaire-insert for easy LED modernization of existing T8 (or T5) fluorescent-lamp based, metallic luminaires.

The upgrade can be carried out in no time at all, as LINEAR MAGNETIC BATTEN T5 is simply installed into the original luminaire housing via strong magnets and connect via a tool-free CONNECTOR BOX.

As a major benefit, the interior of the original luminaire remains mostly untouched, and even dismantling the existing luminaire from the ceiling can often be avoided.

As a perfect match, our extensive LEDVANCE LED TUBE T5 AC range is available as suitable light source family, providing the right lumen amount and light color for a wide range of applications.

FLEXIBLE AND EASY UPGRADE

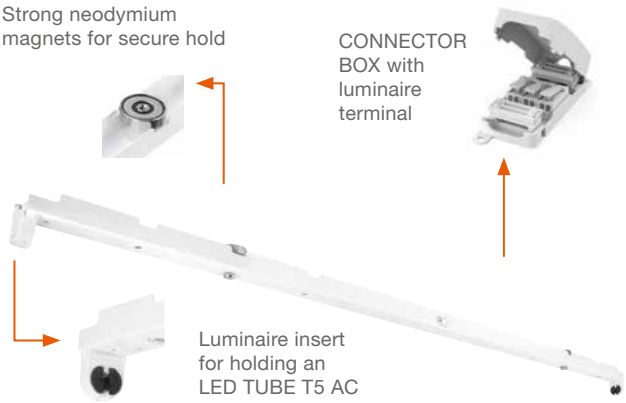

* LED tube not included

TOOL-FREE CONNECTION

The electrical connection of the LINEAR MAGNETIC BATTEN T5 is also easy and time-saving. Thanks to the key terminal in the CONNECTOR BOX, the luminaire insert can be easily wired without tools.

EXTREMELY EASY: INSTALLATION

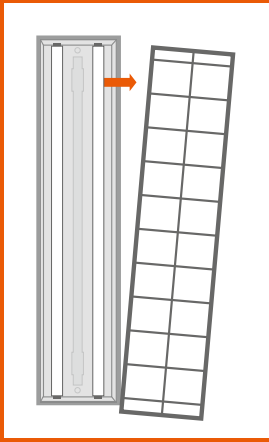

Remove louver from the luminaire

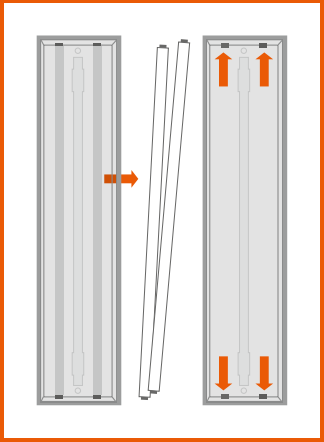

Remove old T8 fluorescent tube and disconnect power on the luminaire terminal

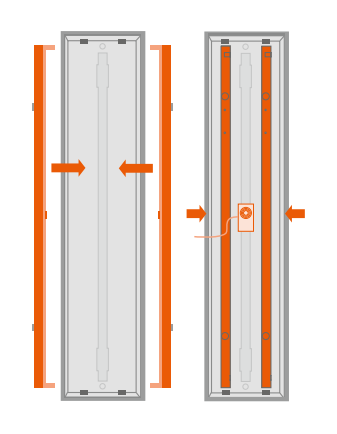

Insert LINEAR MAGNETIC BATTEN T5 with the help of the magnetic attachment and connect to power supply using the tool-free CONNECTOR BOX

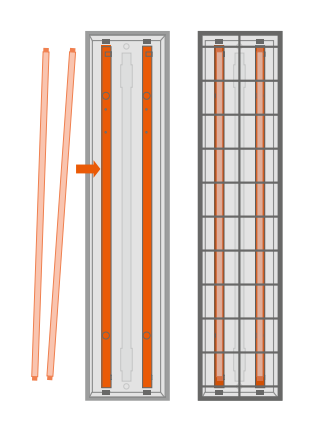

Insert new LED TUBE T5 AC and louver. Done!

LINEAR MAGNETIC BATTEN T5

Luminaire-insert for upgrading existing metallic ceiling luminaires (T8 and T5 fluorescent) to energy-saving LED technology

PRODUCT FEATURES

- Available in 4 lenghtes 568, 868, 1168, 1468 mm
- Luminaire-insert for accommodating a LED TUBE T5 AC 230 V
- Suitable for LED TUBE T5 AC, HE or HO, 830/840/865
- Strong Neodym-Magnets
- Connector Box 3-pole included

PRODUCT BENEFITS

- Upgrade without complete replacement of existing luminaires
- The old luminaires may remain installed on the ceiling during the upgrade process
- Control gear and wiring may remain in the old luminaire
- The easy replacement of the LED TUBE T5 AC allows you to participate in the progress of LED-technology over time
- Quick and easy upgrade solution

AREAS OF APPLICATION

- Offices and public buildings
- Supermarkets and department stores
- Industry
- Hallways, foyers, waiting areas

LEDVANCE 5 year guarantee [1]

Product name	EAN (GTIN)	El.nr.	L × W × H [mm] Ø × H [mm]	Suitable lamp (not included)	MATERIAL	COLOR
LN MAG BATTEN T5 568	4099854**009723**	**3310288**	568 × 25 × 45	LED TUBE T5 AC HE14 549 8W (830/840/865)	Steel	White
				LED TUBE T5 AC HO24 549 10W (830/840/865)		
LN MAG BATTEN T5 868	4058075**821798**	**3310289**	868 × 25 × 45	LED TUBE T5 AC HE21 849 10W (830/840/865)	Steel	White
				LED TUBE T5 AC HO39 849 16W (830/840/865)		
LN MAG BATTEN T5 1168	4099854**009747**	**3310290**	1168 × 25 × 45	LED TUBE T5 AC HE28 1149 16W (830/840/865)	Steel	White
				LED TUBE T5 AC HO54 1149 26W (830/840/865)		
LN MAG BATTEN T5 1468	4099854**009761**	**3310291**	1468 × 25 × 45	LED TUBE T5 AC HE35 1449 18W (830/840/865)	Steel	White
				LED TUBE T5 AC HO49 1449 26W (830/840/865)		
				LED TUBE T5 AC HO80 1449 36W (830/840/865)		

LUMINAIRE AND LAMP FROM A SINGLE SOURCE

The LINEAR MAGNETIC BATTEN T5 does not come with an LED tube.
The LED TUBE T5 AC is a perfect match and is also available from LEDVANCE.

Find out more about the LEDVANCE LED TUBE T5 AC at **ledvance.com/tubes**

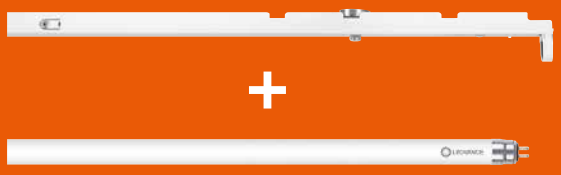

[1] Refer to www.ledvance.com/guarantee for precise conditions

TRUNKING SYSTEMS

TRUSYS FLEX

TRUSYS FLEX

Page 138

TRUSYS FLEX ON/OFF
TRUSYS FLEX DALI
TRUSYS FLEX EM
TRUSYS FLEX ENERGY RAIL
TRUSYS FLEX ACCESSORIES

PERFOR-
MANCE
CLASS

APPLICATIONS	Flexible from shop lighting to industrial applications, warehouses, factories, workshops
AVAILABLE OPTIONS	4 000 K, Tracklight Spots, opal lens **NEW: 6 500 K light color**
AVAILABLE LUMEN VALUES	6 000, 8 600, 12 100 lm (up to 175 lm/W) allow use in different heights
DESIGN	Modern, simple, functional design, attractive white housing
BEAM ANGLE	Very wide (VW): 120°, wide (W): 90°, narrow (N): 60°, very narrow (VN): 30°, double symmetric (DS): 2 × 30° **NEW: Wall washer (WW): 45° beam angle**
INSTALLATION	Very simple and time-saving installation thanks to tool-free “Click & Place” system

For more detailed information about the TRUSYS FLEX systems see the system data sheet at www.ledvance.com/professional

EXTREMELY EFFICIENT AND VERSATILE FOR DIFFERENT APPLICATION REQUIREMENTS

The TRUSYS FLEX trunking system is a real problem solver when it comes to requiring a highly efficient continuous-row lighting system. Numerous mounting and configuration options are possible thanks to the wide range of different components that can be assembled according to the needs of your specific application.

BREAKDOWN OF THE MAIN TRUSYS FLEX COMPONENTS

Easy installation and versatility are key to the TRUSYS FLEX trunking system.

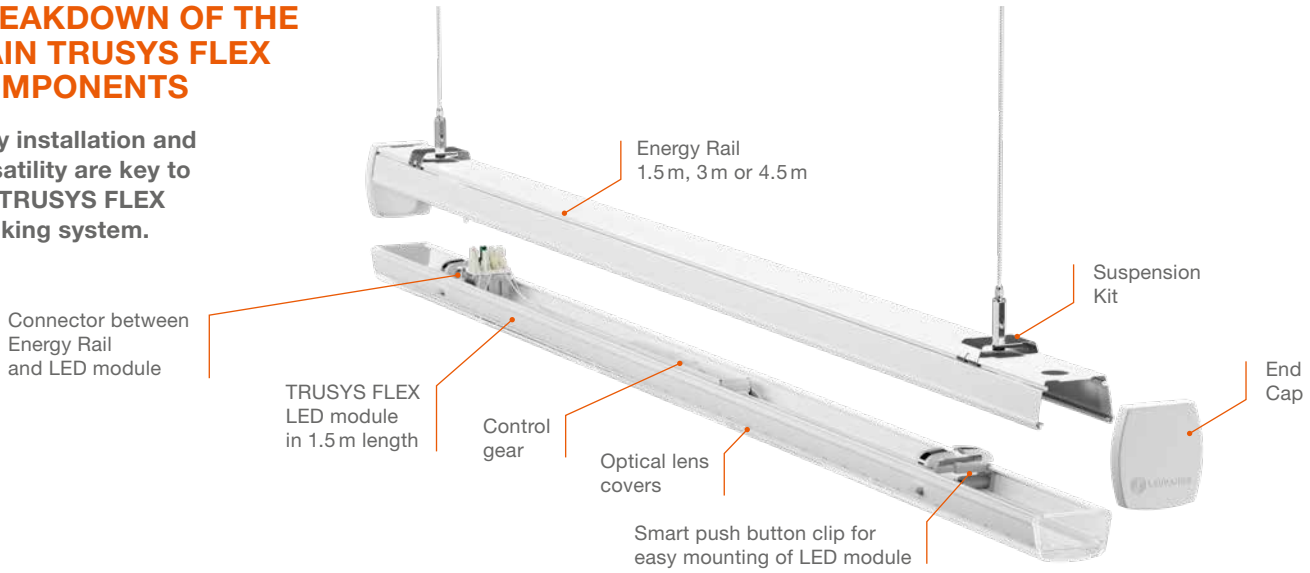

FLEXIBLE THROUGH INSERTS

Separately available adapter insert allows integration of TRACKLIGHT SPOTS into the trunking system – coming soon.

WOULD YOU LIKE MORE INFORMATION?

Just scan this QR code and check out:
ledvance.com/trusysflex-video

TRUSYS FLEX

Efficient trunking system for a wide range of applications

PRODUCT FEATURES

- Sheet steel housing, lens material: PMMA
- Lifetime (L80/B50): up to 89 000 h (at 25 °C)
- Fixed luminaire taps
- Click into place solution with smart click buttons
- Versions with DALI ECG or emergency lighting function (built-in 3 h battery) available

PRODUCT BENEFITS

- Economical thanks to high luminous efficacy of 175 lm/W
- Flexible application through a wide range of beam angles
- Easy and time saving installation, no tools required for connection
- New lens “Opal” with beam angle of 90°

AREAS OF APPLICATION

- Direct replacement for luminaires with fluorescent lamps
- Industry halls, high rack warehouse, hardware stores
- Discounters, supermarkets

EQUIPMENT / ACCESSORIES

- Mounting rail with fixed integrated 5- and 8-pole cable

FURTHER PRODUCT DETAILS

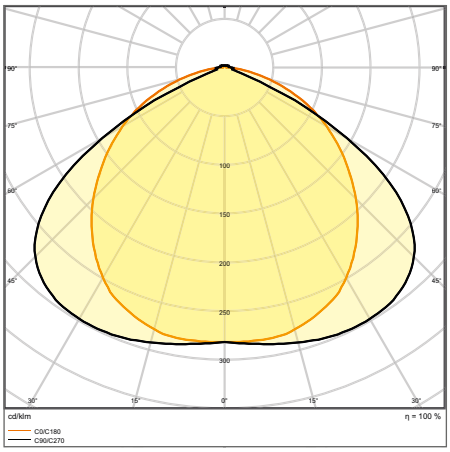

TRUSYS FLEX VW 70 W 4 000 K

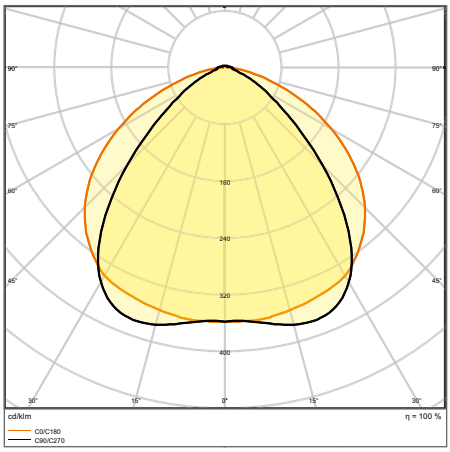

TRUSYS FLEX W 70 W 4 000 K

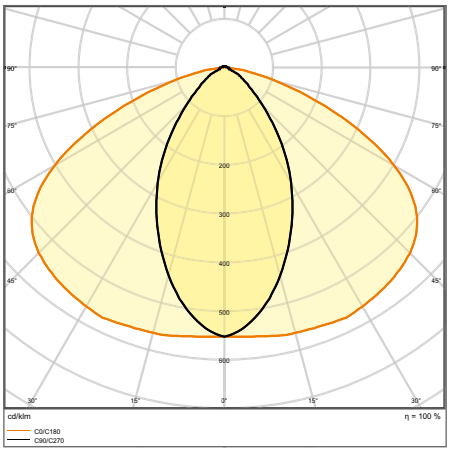

TRUSYS FLEX N 70 W 4 000 K

The pictures shown in the catalog are for illustration purposes only. For information on size and color, please refer to the product table.

FURTHER PRODUCT DETAILS

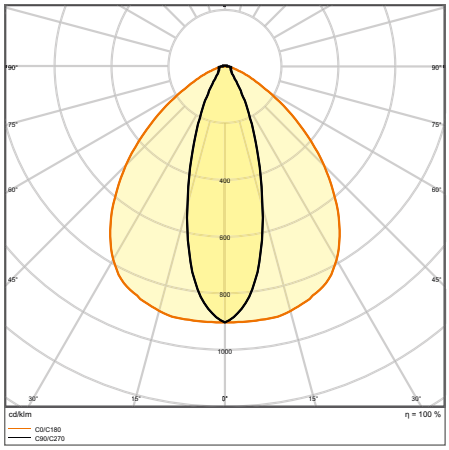

TRUSYS FLEX VN 70 W 4 000 K

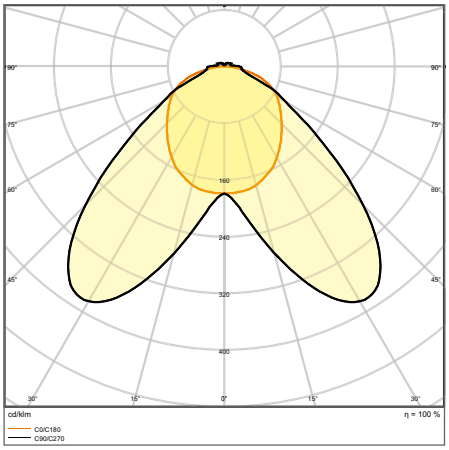

TRUSYS FLEX DS 70 W 4 000 K

TRUSYS FLEX VERY WIDE

Luminaire inserts with very wide light distribution, up to 175 lm/W

PERFORMANCE CLASS | VIVA RES | EN EC | D | FLICKER VALUE ≤5 % [1] | CRI ≥80 | IP 40 | LEDVANCE 5 year guarantee [2]

	Product name	EAN (GTIN)	El.nr.	Replacement for	W	lm	lm/W	K	L70 [3]	°		L × W × H [mm] Ø × H [mm]
	TRUSYS FLEX P 35W 840 VW CL WT	4058075**771017**	—	2 × 49 W FL	35	6000	175	4000	100000	120	—	1500 × 77.7 × 39.4
NEW	TRUSYS FLEX P 35W 865 VW CL WT	4099854**190490**	—	2 × 49 W FL	35	6000	175	6500	100000	120	—	1500 × 77.7 × 39.4
	TRUSYS FLEX P 50W 840 VW CL WT	4058075**771444**	—	2 × 80 W FL	50	8600	175	4000	100000	120	—	1500 × 77.7 × 39.4
NEW	TRUSYS FLEX P 50W 865 VW CL WT	4099854**190650**	—	2 × 80 W FL	50	8600	175	6500	100000	120	—	1500 × 77.7 × 39.4
	TRUSYS FLEX P 70W 840 VW CL WT	4058075**771840**	—	3 × 80 W FL	70	12100	175	4000	100000	120	—	1500 × 77.7 × 39.4
NEW	TRUSYS FLEX P 70W 865 VW CL WT	4099854**190810**	—	3 × 80 W FL	70	12100	175	6500	100000	120	—	1500 × 77.7 × 39.4
	TRUSYS FLEX P 35W 840 VW CL WT DALI	4058075**770799**	—	2 × 49 W FL	35	5700	175	4000	100000	120	DALI-2	1500 × 77.7 × 39.4
NEW	TRUSYS FLEX P 35W 865 VW CL WT DALI	4099854**191039**	—	2 × 49 W FL	35	5700	165	6500	100000	120	DALI-2	1500 × 77.7 × 39.4
	TRUSYS FLEX P 50W 840 VW CL WT DALI	4058075**770911**	—	2 × 80 W FL	50	8600	175	4000	100000	120	DALI-2	1500 × 77.7 × 39.4
NEW	TRUSYS FLEX P 50W 865 VW CL WT DALI	4099854**191190**	—	2 × 80 W FL	50	8600	175	6500	100000	120	DALI-2	1500 × 77.7 × 39.4
	TRUSYS FLEX P 70W 840 VW CL WT DALI	4058075**771055**	—	3 × 80 W FL	70	12100	175	4000	100000	120	DALI-2	1500 × 77.7 × 39.4
NEW	TRUSYS FLEX P 70W 865 VW CL WT DALI	4099854**191459**	—	3 × 80 W FL	70	12100	175	6500	100000	120	DALI-2	1500 × 77.7 × 39.4

[1] Flicker value ≤ 10 % for DALI versions
[2] Refer to www.ledvance.com/guarantee for precise conditions
[3] t[h]: L70 / B50 @ 25 °C (T_a) / t[h]: L80 / B10 @ 25 °C (T_a)

TRUSYS FLEX WIDE

Luminaire inserts with wide light distribution, up to 175 lm/W

PERFORMANCE CLASS | VIVA RES | EN EC | D | FLICKER VALUE ≤5 % [1] | CRI ≥80 | IP40 | LEDVANCE 5 year guarantee [2]

	Product name	EAN (GTIN)	El.nr.	Replacement for	W	lm	lm/W	K	L70 [3]	°		L × W × H [mm] Ø × H [mm]
	TRUSYS FLEX P 35W 840 W CL WT	4058075**771093**	—	2 × 49 W FL	35	6000	175	4000	100000	90	—	1500 × 77.7 × 39.4
NEW	TRUSYS FLEX P 35W 865 W CL WT	4099854**190513**	—	2 × 49 W FL	35	6000	175	6500	100000	90	—	1500 × 77.7 × 39.4
	TRUSYS FLEX P 50W 840 W CL WT	4058075**771482**	—	2 × 80 W FL	50	8600	175	4000	100000	90	—	1500 × 77.7 × 39.4
NEW	TRUSYS FLEX P 50W 865 W CL WT	4099854**190674**	—	2 × 80 W FL	50	8600	175	6500	100000	90	—	1500 × 77.7 × 39.4
	TRUSYS FLEX P 70W 840 W CL WT	4058075**771864**	—	3 × 80 W FL	70	12100	175	4000	100000	90	—	1500 × 77.7 × 39.4
NEW	TRUSYS FLEX P 70W 865 W CL WT	4099854**190834**	—	3 × 80 W FL	70	12100	175	6500	100000	90	—	1500 × 77.7 × 39.4
	TRUSYS FLEX P 35W 840 W CL WT DALI	4058075**770812**	—	2 × 49 W FL	35	5800	175	4000	100000	90	DALI-2	1500 × 77.7 × 39.4
NEW	TRUSYS FLEX P 35W 865 W CL WT DALI	4099854**191053**	—	2 × 49 W FL	35	5800	170	6500	100000	90	DALI-2	1500 × 77.7 × 39.4
	TRUSYS FLEX P 50W 840 W CL WT DALI	4058075**770935**	—	2 × 80 W FL	50	8600	175	4000	100000	90	DALI-2	1500 × 77.7 × 39.4
NEW	TRUSYS FLEX P 50W 865 W CL WT DALI	4099854**191312**	—	2 × 80 W FL	50	8600	175	6500	100000	90	DALI-2	1500 × 77.7 × 39.4
	TRUSYS FLEX P 70W 840 W CL WT DALI	4058075**771079**	—	3 × 80 W FL	70	12100	175	4000	100000	90	DALI-2	1500 × 77.7 × 39.4
NEW	TRUSYS FLEX P 70W 865 W CL WT DALI	4099854**191473**	—	3 × 80 W FL	70	12100	175	6500	100000	90	DALI-2	1500 × 77.7 × 39.4

TRUSYS FLEX WIDE OPAL

Luminaire inserts with wide light distribution and opal lens, up to 167 lm/W

PERFORMANCE CLASS | VIVA RES | EN EC | D | FLICKER VALUE ≤5 % [1] | CRI ≥80 | IP40 | LEDVANCE 5 year guarantee [2]

	Product name	EAN (GTIN)	El.nr.	Replacement for	W	lm	lm/W	K	L70 [3]	°		L × W × H [mm] Ø × H [mm]
	TRUSYS FLEX P 35W 840 W OP WT	4058075**771406**	—	2 × 49 W FL	35	5800	167	4000	100000	90	—	1500 × 77.7 × 39.4
NEW	TRUSYS FLEX P 35W 865 W OP WT	4099854**190599**	—	2 × 49 W FL	35	5800	167	6500	100000	90	—	1500 × 77.7 × 39.4
	TRUSYS FLEX P 50W 840 W OP WT	4058075**771826**	—	2 × 80 W FL	50	8300	167	4000	100000	90	—	1500 × 77.7 × 39.4
NEW	TRUSYS FLEX P 50W 865 W OP WT	4099854**190759**	—	2 × 80 W FL	50	8300	167	6500	100000	90	—	1500 × 77.7 × 39.4
	TRUSYS FLEX P 70W 840 W OP WT	4058075**772090**	—	3 × 80 W FL	70	11700	167	4000	100000	90	—	1500 × 77.7 × 39.4
NEW	TRUSYS FLEX P 70W 865 W OP WT	4099854**190919**	—	3 × 80 W FL	70	11700	167	6500	100000	90	—	1500 × 77.7 × 39.4
	TRUSYS FLEX P 35W 840 W OP WT DALI	4058075**770898**	—	2 × 49 W FL	35	5600	167	4000	100000	90	DALI-2	1500 × 77.7 × 39.4
NEW	TRUSYS FLEX P 35W 865 W OP WT DALI	4099854**191138**	—	2 × 49 W FL	35	5600	160	6500	100000	90	DALI-2	1500 × 77.7 × 39.4
	TRUSYS FLEX P 50W 840 W OP WT DALI	4058075**771031**	—	2 × 80 W FL	50	8300	167	4000	100000	90	DALI-2	1500 × 77.7 × 39.4
NEW	TRUSYS FLEX P 50W 865 W OP WT DALI	4099854**191398**	—	2 × 80 W FL	50	8300	167	6500	100000	90	DALI-2	1500 × 77.7 × 39.4
	TRUSYS FLEX P 70W 840 W OP WT DALI	4058075**771901**	—	3 × 80 W FL	70	11700	167	4000	100000	90	DALI-2	1500 × 77.7 × 39.4
NEW	TRUSYS FLEX P 70W 865 W OP WT DALI	4099854**191558**	—	3 × 80 W FL	70	11700	167	6500	100000	90	DALI-2	1500 × 77.7 × 39.4

[1] Flicker value ≤ 10 % for DALI versions
[2] Refer to www.ledvance.com/guarantee for precise conditions
[3] t[h]: L70/B50 @ 25 °C (T_a)/t[h]: L80/B10 @ 25 °C (T_a)

TRUSYS FLEX NARROW

Luminaire inserts with narrow light distribution, up to 175 lm/W

PERFORMANCE CLASS · VIVA RES · EN EC · D · FLICKER VALUE ≤5% [1] · CRI ≥80 · IP40 · LEDVANCE 5 year guarantee [2]

	Product name	EAN (GTIN)	El.nr.	Replacement for	W	lm	lm/W	K	L70 [3]	°		L × W × H [mm] Ø × H [mm]
	TRUSYS FLEX P 35W 840 N CL WT	4058075**771307**	—	2 × 49 W FL	35	6000	175	4000	100000	60	—	1500 × 77.7 × 39.4
NEW	TRUSYS FLEX P 35W 865 N CL WT	4099854**190537**	—	2 × 49 W FL	35	6000	175	6500	100000	60	—	1500 × 77.7 × 39.4
	TRUSYS FLEX P 50W 840 N CL WT	4058075**771574**	—	2 × 80 W FL	50	8600	175	4000	100000	60	—	1500 × 77.7 × 39.4
NEW	TRUSYS FLEX P 50W 865 N CL WT	4099854**190698**	—	2 × 80 W FL	50	8600	175	6500	100000	60	—	1500 × 77.7 × 39.4
	TRUSYS FLEX P 70W 840 N CL WT	4058075**771888**	—	3 × 80 W FL	70	12100	175	4000	100000	60	—	1500 × 77.7 × 39.4
NEW	TRUSYS FLEX P 70W 865 N CL WT	4099854**190858**	—	3 × 80 W FL	70	12100	175	6500	100000	60	—	1500 × 77.7 × 39.4
	TRUSYS FLEX P 35W 840 N CL WT DALI	4058075**770836**	—	2 × 49 W FL	35	5800	175	4000	100000	60	DALI-2	1500 × 77.7 × 39.4
NEW	TRUSYS FLEX P 35W 865 N CL WT DALI	4099854**191077**	—	2 × 49 W FL	35	5800	170	6500	100000	60	DALI-2	1500 × 77.7 × 39.4
	TRUSYS FLEX P 50W 840 N CL WT DALI	4058075**770959**	—	2 × 80 W FL	50	8600	175	4000	100000	60	DALI-2	1500 × 77.7 × 39.4
NEW	TRUSYS FLEX P 50W 865 N CL WT DALI	4099854**191336**	—	2 × 80 W FL	50	8600	175	6500	100000	60	DALI-2	1500 × 77.7 × 39.4
	TRUSYS FLEX P 70W 840 N CL WT DALI	4058075**771116**	—	3 × 80 W FL	70	12100	175	4000	100000	60	DALI-2	1500 × 77.7 × 39.4
NEW	TRUSYS FLEX P 70W 865 N CL WT DALI	4099854**191497**		3 × 80 W FL	70	12100	175	6500	100000	60	DALI-2	1500 × 77.7 × 39.4

TRUSYS FLEX VERY NARROW

Luminaire inserts with very narrow light distribution, up to 175 lm/W

PERFORMANCE CLASS · VIVA RES · EN EC · D · FLICKER VALUE ≤5% [1] · CRI ≥80 · IP40 · LEDVANCE 5 year guarantee [2]

	Product name	EAN (GTIN)	El.nr.	Replacement for	W	lm	lm/W	K	L70 [3]	°		L × W × H [mm] Ø × H [mm]
	TRUSYS FLEX P 35W 840 VN CL WT	4058075**771345**	—	2 × 49 W FL	35	6000	175	4000	100000	30	—	1500 × 77.7 × 39.4
NEW	TRUSYS FLEX P 35W 865 VN CL WT	4099854**190551**	—	2 × 49 W FL	35	6000	175	6500	100000	30	—	1500 × 77.7 × 39.4
	TRUSYS FLEX P 50W 840 VN CL WT	4058075**771604**	—	2 × 80 W FL	50	8600	175	4000	100000	30	—	1500 × 77.7 × 39.4
NEW	TRUSYS FLEX P 50W 865 VN CL WT	4099854**190711**	—	2 × 80 W FL	50	8600	175	6500	100000	30	—	1500 × 77.7 × 39.4
	TRUSYS FLEX P 70W 840 VN CL WT	4058075**771925**	—	3 × 80 W FL	70	12100	175	4000	100000	30	—	1500 × 77.7 × 39.4
NEW	TRUSYS FLEX P 70W 865 VN CL WT	4099854**190872**	—	3 × 80 W FL	70	12100	175	6500	100000	30	—	1500 × 77.7 × 39.4
	TRUSYS FLEX P 35W 840 VN CL WT DALI	4058075**770850**	—	2 × 49 W FL	35	5800	175	4000	100000	30	DALI-2	1500 × 77.7 × 39.4
NEW	TRUSYS FLEX P 35W 865 VN CL WT DALI	4099854**191091**	—	2 × 49 W FL	35	5800	170	6500	100000	30	DALI-2	1500 × 77.7 × 39.4
	TRUSYS FLEX P 50W 840 VN CL WT DALI	4058075**770973**	—	2 × 80 W FL	50	8600	175	4000	100000	30	DALI-2	1500 × 77.7 × 39.4
NEW	TRUSYS FLEX P 50W 865 VN CL WT DALI	4099854**191350**	—	2 × 80 W FL	50	8600	175	6500	100000	30	DALI-2	1500 × 77.7 × 39.4
	TRUSYS FLEX P 70W 840 VN CL WT DALI	4058075**771130**	—	3 × 80 W FL	70	12100	175	4000	100000	30	DALI-2	1500 × 77.7 × 39.4
NEW	TRUSYS FLEX P 70W 865 VN CL WT DALI	4099854**191510**	—	3 × 80 W FL	70	12100	175	6500	100000	30	DALI-2	1500 × 77.7 × 39.4

[1] Flicker value ≤ 10 % for DALI versions
[2] Refer to www.ledvance.com/guarantee for precise conditions
[3] t[h]: L70/B50 @ 25 °C (T_a)/t[h]: L80/B10 @ 25 °C (T_a)

TRUSYS FLEX DOUBLE SYMMETRIC

Luminaire inserts with double symmetric light distribution, up to 175 lm/W

PERFORMANCE CLASS · VIVA RES · EN EC · D · FLICKER VALUE ≤5% [1] · CRI ≥80 · IP40 · LEDVANCE 5 year guarantee [2]

	Product name	EAN (GTIN)	El.nr.	Replacement for	W	lm	lm/W	K	L70 [3]	°		L × W × H [mm] Ø × H [mm]
	TRUSYS FLEX P 35W 840 DS CL WT	4058075**771383**	—	2 × 49 W FL	35	6000	175	4000	100000	2 × 30	—	1500 × 77.7 × 39.4
NEW	TRUSYS FLEX P 35W 865 DS CL WT	4099854**190575**	—	2 × 49 W FL	35	6000	175	6500	100000	2 × 30	—	1500 × 77.7 × 39.4
	TRUSYS FLEX P 50W 840 DS CL WT	4058075**771802**	—	2 × 80 W FL	50	8600	175	4000	100000	2 × 30	—	1500 × 77.7 × 39.4
NEW	TRUSYS FLEX P 50W 865 DS CL WT	4099854**190735**	—	2 × 80 W FL	50	8600	175	6500	100000	2 × 30	—	1500 × 77.7 × 39.4
	TRUSYS FLEX P 70W 840 DS CL WT	4058075**771994**	—	3 × 80 W FL	70	12100	175	4000	100000	2 × 30	—	1500 × 77.7 × 39.4
NEW	TRUSYS FLEX P 70W 865 DS CL WT	4099854**190896**	—	3 × 80 W FL	70	12100	175	6500	100000	2 × 30	—	1500 × 77.7 × 39.4
	TRUSYS FLEX P 35W 840 DS CL WT DALI	4058075**770874**	—	2 × 49 W FL	35	5700	175	4000	100000	2 × 30	DALI-2	1500 × 77.7 × 39.4
NEW	TRUSYS FLEX P 35W 865 DS CL WT DALI	4099854**191114**	—	2 × 49 W FL	35	5700	165	6500	100000	2 × 30	DALI-2	1500 × 77.7 × 39.4
	TRUSYS FLEX P 50W 840 DS CL WT DALI	4058075**770997**	—	2 × 80 W FL	50	8600	175	4000	100000	2 × 30	DALI-2	1500 × 77.7 × 39.4
NEW	TRUSYS FLEX P 50W 865 DS CL WT DALI	4099854**191374**	—	2 × 80 W FL	50	8600	175	6500	100000	2 × 30	DALI-2	1500 × 77.7 × 39.4
	TRUSYS FLEX P 70W 840 DS CL WT DALI	4058075**771154**	—	3 × 80 W FL	70	12100	175	4000	100000	2 × 30	DALI-2	1500 × 77.7 × 39.4
NEW	TRUSYS FLEX P 70W 865 DS CL WT DALI	4099854**191534**	—	3 × 80 W FL	70	12100	175	6500	100000	2 × 30	DALI-2	1500 × 77.7 × 39.4

TRUSYS FLEX WALLWASHER

Luminaire inserts with asymmetric wallwasher light distribution, up to 175 lm/W

PERFORMANCE CLASS · VIVA RES · EN EC · D · FLICKER VALUE ≤5% [1] · CRI ≥80 · IP40 · LEDVANCE 5 year guarantee [2]

	Product name	EAN (GTIN)	El.nr.	Replacement for	W	lm	lm/W	K	L70 [3]	°		L × W × H [mm] Ø × H [mm]
NEW	TRUSYS FLEX P 35W 840 WW CL WT	4099854**190636**	—	2 × 49 W FL	35	6000	175	4000	100000	45	—	1500 × 77.7 × 39.4
NEW	TRUSYS FLEX P 35W 865 WW CL WT	4099854**190612**	—	2 × 49 W FL	35	6000	175	6500	100000	45	—	1500 × 77.7 × 39.4
NEW	TRUSYS FLEX P 50W 840 WW CL WT	4099854**190797**	—	2 × 80 W FL	50	8600	175	4000	100000	45	—	1500 × 77.7 × 39.4
NEW	TRUSYS FLEX P 50W 865 WW CL WT	4099854**190773**	—	2 × 80 W FL	50	8600	175	6500	100000	45	—	1500 × 77.7 × 39.4
NEW	TRUSYS FLEX P 70W 840 WW CL WT	4099854**190957**	—	3 × 80 W FL	70	12100	175	4000	100000	45	—	1500 × 77.7 × 39.4
NEW	TRUSYS FLEX P 70W 865 WW CL WT	4099854**190933**	—	3 × 80 W FL	70	12100	175	6500	100000	45	—	1500 × 77.7 × 39.4
NEW	TRUSYS FLEX P 35W 840 WW CL WT DALI	4099854**191176**	—	2 × 49 W FL	35	5700	165	4000	100000	45	DALI-2	1500 × 77.7 × 39.4
NEW	TRUSYS FLEX P 35W 865 WW CL WT DALI	4099854**191152**	—	2 × 49 W FL	35	5700	165	6500	100000	45	DALI-2	1500 × 77.7 × 39.4
NEW	TRUSYS FLEX P 50W 840 WW CL WT DALI	4099854**191435**	—	2 × 80 W FL	50	8600	175	4000	100000	45	DALI-2	1500 × 77.7 × 39.4
NEW	TRUSYS FLEX P 50W 865 WW CL WT DALI	4099854**191411**	—	2 × 80 W FL	50	8600	175	6500	100000	45	DALI-2	1500 × 77.7 × 39.4
NEW	TRUSYS FLEX P 70W 840 WW CL WT DALI	4099854**191596**	—	3 × 80 W FL	70	12100	175	4000	100000	45	DALI-2	1500 × 77.7 × 39.4
NEW	TRUSYS FLEX P 70W 865 WW CL WT DALI	4099854**191572**	—	3 × 80 W FL	70	12100	175	6500	100000	45	DALI-2	1500 × 77.7 × 39.4

[1] Flicker value ≤ 10 % for DALI versions
[2] Refer to www.ledvance.com/guarantee for precise conditions
[3] t[h]: L70/B50 @ 25 °C (T_a) / t[h]: L80/B10 @ 25 °C (T_a)

TRUSYS FLEX EMERGENCY VERY WIDE

Luminaire inserts with very wide light distribution for standard and emergency lighting, up to 175 lm/W

PERFORMANCE CLASS | FLICKER VALUE ≤5% | CRI ≥80 | IP40 | LEDVANCE 3 year guarantee [1]

	Product name	EAN (GTIN)	El.nr.	Replacement for	W	lm	lm/W	K	L70 [2]	∡°	L × W × H [mm] Ø × H [mm]
	TRUSYS FLEX P 35W 840 VW CL WT EM	4058075**772878**	—	2 × 49 W FL	35	6000	175	4000	100000	120	1500 × 77.7 × 39.4
NEW	TRUSYS FLEX P 35W 865 VW CL WT EM	4099854**191619**	—	2 × 49 W FL	35	6000	175	6500	100000	120	1500 × 77.7 × 39.4
	TRUSYS FLEX P 50W 840 VW CL WT EM	4058075**773004**	—	2 × 80 W FL	50	8600	175	4000	100000	120	1500 × 77.7 × 39.4
NEW	TRUSYS FLEX P 50W 865 VW CL WT EM	4099854**191770**	—	2 × 80 W FL	50	8600	175	6500	100000	120	1500 × 77.7 × 39.4
	TRUSYS FLEX P 70W 840 VW CL WT EM	4058075**773219**	—	3 × 80 W FL	70	12100	175	4000	100000	120	1500 × 77.7 × 39.4
NEW	TRUSYS FLEX P 70W 865 VW CL WT EM	4099854**190414**	—	3 × 80 W FL	70	12100	175	6500	100000	120	1500 × 77.7 × 39.4

TRUSYS FLEX EMERGENCY WIDE

Luminaire inserts with wide light distribution for standard and emergency lighting, up to 175 lm/W

PERFORMANCE CLASS | FLICKER VALUE ≤5% | CRI ≥80 | IP40 | LEDVANCE 3 year guarantee [1]

	Product name	EAN (GTIN)	El.nr.	Replacement for	W	lm	lm/W	K	L70 [2]	∡°	L × W × H [mm] Ø × H [mm]
	TRUSYS FLEX P 35W 840 W CL WT EM	4058075**772892**	—	2 × 49 W FL	35	6000	175	4000	100000	90	1500 × 77.7 × 39.4
NEW	TRUSYS FLEX P 35W 865 W CL WT EM	4099854**191633**	—	2 × 49 W FL	35	6000	175	6500	100000	90	1500 × 77.7 × 39.4
	TRUSYS FLEX P 50W 840 W CL WT EM	4058075**773103**	—	2 × 80 W FL	50	8600	175	4000	100000	90	1500 × 77.7 × 39.4
NEW	TRUSYS FLEX P 50W 865 W CL WT EM	4099854**191794**	—	2 × 80 W FL	50	8600	175	6500	100000	90	1500 × 77.7 × 39.4
	TRUSYS FLEX P 70W 840 W CL WT EM	4058075**773233**	—	3 × 80 W FL	70	12100	175	4000	100000	90	1500 × 77.7 × 39.4
NEW	TRUSYS FLEX P 70W 865 W CL WT EM	4099854**191930**	—	3 × 80 W FL	70	12100	175	6500	100000	90	1500 × 77.7 × 39.4

TRUSYS FLEX EMERGENCY WIDE OPAL

Luminaire inserts with wide light distribution for standard and emergency lighting, with opal lense, up to 167 lm/W

PERFORMANCE CLASS | FLICKER VALUE ≤5% | CRI ≥80 | IP40 | LEDVANCE 3 year guarantee [1]

	Product name	EAN (GTIN)	El.nr.	Replacement for	W	lm	lm/W	K	L70 [2]	∡°	L × W × H [mm] Ø × H [mm]
	TRUSYS FLEX P 35W 840 W OP WT EM	4058075**772977**	—	2 × 49 W FL	35	5800	167	4000	100000	90	1500 × 77.7 × 39.4
NEW	TRUSYS FLEX P 35W 865 W OP WT EM	4099854**191718**	—	2 × 49 W FL	35	5800	167	6500	100000	90	1500 × 77.7 × 39.4
	TRUSYS FLEX P 50W 840 W OP WT EM	4058075**773189**	—	2 × 80 W FL	50	8300	167	4000	100000	90	1500 × 77.7 × 39.4
NEW	TRUSYS FLEX P 50W 865 W OP WT EM	4099854**191879**	—	2 × 80 W FL	50	8300	167	6500	100000	90	1500 × 77.7 × 39.4
	TRUSYS FLEX P 70W 840 W OP WT EM	4058075**773318**	—	3 × 80 W FL	70	11700	167	4000	100000	90	1500 × 77.7 × 39.4
NEW	TRUSYS FLEX P 70W 865 W OP WT EM	4099854**192012**	—	3 × 80 W FL	70	11700	167	6500	100000	90	1500 × 77.7 × 39.4

[1] Refer to www.ledvance.com/guarantee for precise conditions
[2] t[h]: L70/B50 @ 25 °C (T_a)/t[h]: L80/B10 @ 25 °C (T_a)

TRUSYS FLEX EMERGENCY NARROW

Luminaire inserts with narrow light distribution for standard and emergency lighting, up to 175 lm/W

PERFORMANCE CLASS

FLICKER VALUE ≤5% | CRI ≥80 | IP40 | LEDVANCE 3 year guarantee [1]

	Product name	EAN (GTIN)	El.nr.	Replacement for	W	lm	lm/W	K	L70 [2]	∡°	L × W × H [mm] Ø × H [mm]
	TRUSYS FLEX P 35W 840 N CL WT EM	4058075**772915**	—	2 × 49 W FL	35	6000	175	4000	100000	60	1500 × 77.7 × 39.4
NEW	TRUSYS FLEX P 35W 865 N CL WT EM	4099854**191657**	—	2 × 49 W FL	35	6000	175	6500	100000	60	1500 × 77.7 × 39.4
	TRUSYS FLEX P 50W 840 N CL WT EM	4058075**773127**	—	2 × 80 W FL	50	8600	175	4000	100000	60	1500 × 77.7 × 39.4
NEW	TRUSYS FLEX P 50W 865 N CL WT EM	4099854**191817**	—	2 × 80 W FL	50	8600	175	6500	100000	60	1500 × 77.7 × 39.4
	TRUSYS FLEX P 70W 840 N CL WT EM	4058075**773257**	—	3 × 80 W FL	70	12100	175	4000	100000	60	1500 × 77.7 × 39.4
NEW	TRUSYS FLEX P 70W 865 N CL WT EM	4099854**191954**	—	3 × 80 W FL	70	12100	175	6500	100000	60	1500 × 77.7 × 39.4

TRUSYS FLEX EMERGENCY VERY NARROW

Luminaire inserts with very narrow light distribution for standard and emergency lighting, up to 175 lm/W

PERFORMANCE CLASS

FLICKER VALUE ≤5% | CRI ≥80 | IP40 | LEDVANCE 3 year guarantee [1]

	Product name	EAN (GTIN)	El.nr.	Replacement for	W	lm	lm/W	K	L70 [2]	∡°	L × W × H [mm] Ø × H [mm]
	TRUSYS FLEX P 35W 840 VN CL WT EM	4058075**772939**	—	2 × 49 W FL	35	6000	175	4000	100000	30	1500 × 77.7 × 39.4
NEW	TRUSYS FLEX P 35W 865 VN CL WT EM	4099854**191671**	—	2 × 49 W FL	35	6000	175	6500	100000	30	1500 × 77.7 × 39.4
	TRUSYS FLEX P 50W 840 VN CL WT EM	4058075**773141**	—	2 × 80 W FL	50	8600	175	4000	100000	30	1500 × 77.7 × 39.4
NEW	TRUSYS FLEX P 50W 865 VN CL WT EM	4099854**191831**	—	2 × 80 W FL	50	8600	175	6500	100000	30	1500 × 77.7 × 39.4
	TRUSYS FLEX P 70W 840 VN CL WT EM	4058075**773271**	—	3 × 80 W FL	70	12100	175	4000	100000	30	1500 × 77.7 × 39.4
NEW	TRUSYS FLEX P 70W 865 VN CL WT EM	4099854**191978**	—	3 × 80 W FL	70	12100	175	6500	100000	30	1500 × 77.7 × 39.4

TRUSYS FLEX EMERGENCY DOUBLE ASYMMETRIC

Luminaire inserts with double asymmetric light distribution for standard and emergency lighting, up to 175 lm/W

PERFORMANCE CLASS

FLICKER VALUE ≤5% | CRI ≥80 | IP40 | LEDVANCE 3 year guarantee [1]

	Product name	EAN (GTIN)	El.nr.	Replacement for	W	lm	lm/W	K	L70 [2]	∡°	L × W × H [mm] Ø × H [mm]
	TRUSYS FLEX P 35W 840 DS CL WT EM	4058075**772953**	—	2 × 49 W FL	35	6000	175	4000	100000	2 × 30	1500 × 77.7 × 39.4
NEW	TRUSYS FLEX P 35W 865 DS CL WT EM	4099854**191695**	—	2 × 49 W FL	35	6000	175	6500	100000	2 × 30	1500 × 77.7 × 39.4
	TRUSYS FLEX P 50W 840 DS CL WT EM	4058075**773165**	—	2 × 80 W FL	50	8600	175	4000	100000	2 × 30	1500 × 77.7 × 39.4
NEW	TRUSYS FLEX P 50W 865 DS CL WT EM	4099854**191855**	—	2 × 80 W FL	50	8600	175	6500	100000	2 × 30	1500 × 77.7 × 39.4
	TRUSYS FLEX P 70W 840 DS CL WT EM	4058075**773295**	—	3 × 80 W FL	70	12100	175	4000	100000	2 × 30	1500 × 77.7 × 39.4
NEW	TRUSYS FLEX P 70W 865 DS CL WT EM	4099854**191992**	—	3 × 80 W FL	70	12100	175	6500	100000	2 × 30	1500 × 77.7 × 39.4

[1] Refer to www.ledvance.com/guarantee for precise conditions
[2] t[h]: L70/B50 @ 25 °C (T_a)/t[h]: L80/B10 @ 25 °C (T_a)

TRUSYS FLEX EMERGENCY WALLWASHER

Luminaire inserts with asymmetric wallwasher light distribution for standard and emergency lighting, up to 175 lm/W

PERFOR-MANCE CLASS

FLICKER VALUE ≤5%

CRI ≥80

IP40

LEDVANCE 3 year guarantee [1]

	Product name	EAN (GTIN)	El.nr.	Replacement for	W	lm	lm/W	K	L70 [2]	°	L × W × H [mm] Ø × H [mm]
NEW	TRUSYS FLEX P 35W 840 WW CL WT EM	4099854**191756**	—	2 × 49 W FL	35	6000	175	4000	100000	45	1500 × 77.7 × 39.4
NEW	TRUSYS FLEX P 35W 865 WW CL WT EM	4099854**191732**	—	2 × 49 W FL	35	6000	175	6500	100000	45	1500 × 77.7 × 39.4
NEW	TRUSYS FLEX P 50W 840 WW CL WT EM	4099854**191916**	—	2 × 80 W FL	50	8600	175	4000	100000	45	1500 × 77.7 × 39.4
NEW	TRUSYS FLEX P 50W 865 WW CL WT EM	4099854**191893**	—	2 × 80 W FL	50	8600	175	6500	100000	45	1500 × 77.7 × 39.4
NEW	TRUSYS FLEX P 70W 840 WW CL WT EM	4099854**192050**	—	3 × 80 W FL	70	12100	175	4000	100000	45	1500 × 77.7 × 39.4
NEW	TRUSYS FLEX P 70W 865 WW CL WT EM	4099854**192036**	—	3 × 80 W FL	70	12100	175	6500	100000	45	1500 × 77.7 × 39.4

EMERGENCY LIGHTING PROPERTIES

Product name	Battery life in emergency operation mode	Type of emergency operation test	Type of emergency light operation	Luminous flux in emergency operation mode	Type of Battery
VALID FOR ALL TRUSYS FLEX EMERGENCY TYPES	3 h	Automatic	Maintained/Non-maintained	740 lm	LiFePO4

[1] Refer to www.ledvance.com/guarantee for precise conditions
[2] t[h]: L70/B50 @ 25 °C (T_a)/t[h]: L80/B10 @ 25 °C (T_a)

TRUSYS FLEX ENERGY RAIL 5-POLE

Trunking system 5-pole mounting energy rail

PRODUCT FEATURES

- Through-wired with 5-core cable
- Different lengths available
- Electrical connection internal at the first luminaire, no external connection unit required
- Steel-sheet housing
- End rail without electrical and mechanical connectors

PRODUCT BENEFITS

- Simple installation
- High flexibility thanks to two available lengths (1 500 mm, 3 000 mm, 4 500 mm and 1 500 mm end rail)

AREAS OF APPLICATION

- Industry halls, high rack warehouse, hardware stores

EQUIPMENT / ACCESSORIES

- Various accessories available as an optional accessory

PERFOR-MANCE CLASS

LEDVANCE 5 year guarantee [1]

Product name	EAN (GTIN)	El.nr.	L × W × H [mm] Ø × H [mm]	MATERIAL	COLOR
TRUSYS FLEX P RAIL 1500 5P WT	4058075**781672**	—	1650 × 70.2 × 38.8	Steel	White
TRUSYS FLEX P RAIL 1500 5P END WT	4058075**781733**	—	1500 × 70.2 × 38.8	Steel	White
TRUSYS FLEX P RAIL 3000 5P WT	4058075**781757**	—	3150 × 70.2 × 38.8	Steel	White
TRUSYS FLEX P RAIL 4500 5P WT	4058075**793156**	—	4650 × 70.2 × 38.8	Steel	White

[1] Refer to www.ledvance.com/guarantee for precise conditions
The pictures shown in the catalog are for illustration purposes only. For information on size and color, please refer to the product table.

TRUSYS FLEX ENERGY RAIL 8-POLE

Trunking system 8-pole mounting energy rail

PRODUCT FEATURES

- Through-wired with 8-core cable
- Different lengths available
- Electrical connection internal at the first luminaire, no external connection unit required
- Steel-sheet housing
- End rail without electrical and mechanical connectors

PRODUCT BENEFITS

- Simple installation
- High flexibility thanks to two available lengths (1 500 mm, 3 000 mm, 4 500 mm and 1 500 mm end rail)

AREAS OF APPLICATION

- Industry halls, high rack warehouse, hardware stores

EQUIPMENT / ACCESSORIES

- Various accessories available as an optional accessory

PERFOR-MANCE CLASS

LEDVANCE 5 year guarantee [1]

Product name	EAN (GTIN)	El.nr.	L × W × H [mm] Ø × H [mm]	MATERIAL	COLOR
TRUSYS FLEX P RAIL 1500 8P WT	4058075**781696**	—	1650 × 70.2 × 38.8	Steel	White
TRUSYS FLEX P RAIL 1500 8P END WT	4058075**781719**	—	1500 × 70.2 × 38.8	Steel	White
TRUSYS FLEX P RAIL 3000 8P WT	4058075**781771**	—	3150 × 70.2 × 38.8	Steel	White
TRUSYS FLEX P RAIL 4500 8P WT	4058075**793170**	—	4650 × 70.2 × 38.8	Steel	White

[1] Refer to www.ledvance.com/guarantee for precise conditions
The pictures shown in the catalog are for illustration purposes only. For information on size and color, please refer to the product table.

TRUSYS FLEX ACCESSORIES

Trunking system accessories

1

2

3

4

5

6

7

8

9

10

11

12

- Suspension Kit:
  for mounting rail, set of two adjustable suspension systems
- Chain Kit:
  set of two mounting brackets and chain hooks
- Blind cover:
  cover for the mounting rail sections without mounted luminaire, including optional side covers for luminaire inserts
- End Cap Energy rail:
  clickable endcap for the mounting rail
- Surface Clip:
  set of two mounting clips
- Grid Ceiling Clip:
  mounting clip for surface mounting on grid ceilings
- Feed-in Connector:
  feed-in 5- and 8-poles connector
- Feed-in Box:
  connector box 5- and 8-pole
- Feed-out Box:
  connector box 5- and 8-pole
- Spot Track 1500:
  150 cm insert with a 90 cm track rail in powergear layout, suitable for LEDVANCE Trackspots, up to 3 track spots can be installed

LEDVANCE 5 year guarantee [1]

Product name	EAN (GTIN)	El.nr.	L × W × H [mm] Ø × H [mm]	MATERIAL	COLOR	No.
TRUSYS FLEX SUSPENSION KIT	4058075**781795**	—	58 × 35 × 65	Steel	Silver	1
TRUSYS FLEX CHAIN KIT	4058075**781818**	—	90 × 28 × 10	Steel	Silver	2
TRUSYS FLEX BLIND COVER WT	4058118**270828**	—	1500 × 70 × 21	Polycarbonate (PC)	White	3
TRUSYS FLEX END CAP RAIL WT	4058075**781856**	—	78 × 72 × 19	Polycarbonate (PC)	White	4
TRUSYS FLEX END CAP LOW RAIL WT	4058075**781870**	—	57 × 72 × 19	Polycarbonate (PC)	White	5
TRUSYS FLEX SURFACE CLIP	4058075**781894**	—	57 × 35 × 18	Steel	Silver	6
TRUSYS FLEX GRID CEILING CLIP	4058075**781917**	—	57 × 35 × 26	Steel	Silver	7
TRUSYS FLEX FEED IN 5P	4058075**781931**	—	39 × 27 × 14	Polyamid (PA)	White	8
TRUSYS FLEX FEED IN 8P	4058075**781955**	—	54 × 27 × 14	Polyamid (PA)	White	9
TRUSYS FLEX FEED IN BOX 5P WT	4058075**781979**	—	272 × 92 × 58	Steel/Polycarbonate (PC)	White	10
TRUSYS FLEX FEED IN BOX 8P WT	4058075**781993**	—	27 × 92 × 582	Steel/Polycarbonate (PC)	White	10
TRUSYS FLEX FEED OUT BOX 5P WT	4058075**782013**	—	296 × 92 × 58	Steel/Polycarbonate (PC)	White	11
TRUSYS FLEX FEED OUT BOX 8P WT	4058075**782037**	—	296 × 92 × 58	Steel/Polycarbonate (PC)	White	11
TRUSYS FLEX SPOT TRACK 1500 WT	4058075**782051**	—	1500 × 70 × 15.2	Aluminum	White	12

[1] Refer to www.ledvance.com/guarantee for precise conditions
The pictures shown in the catalog are for illustration purposes only. For information on size and color, please refer to the product table.

OUR CHECKLIST FOR YOUR PERFECT TRUSYS FLEX SOLUTION

Example installation: So you can install a tailor-made TRUSYS FLEX lighting system for your customers we have put together a summary of the components you'll need for individual luminaires or strip lighting. With appropriate accessories depending on the type of mounting (surface or suspended). For simple strip lighting the mechanical and electrical connectors are already integrated in the trunking.

TRUSYS FLEX INSTALLATION ❶ WITHOUT AND ❷ WITH BLIND COVER

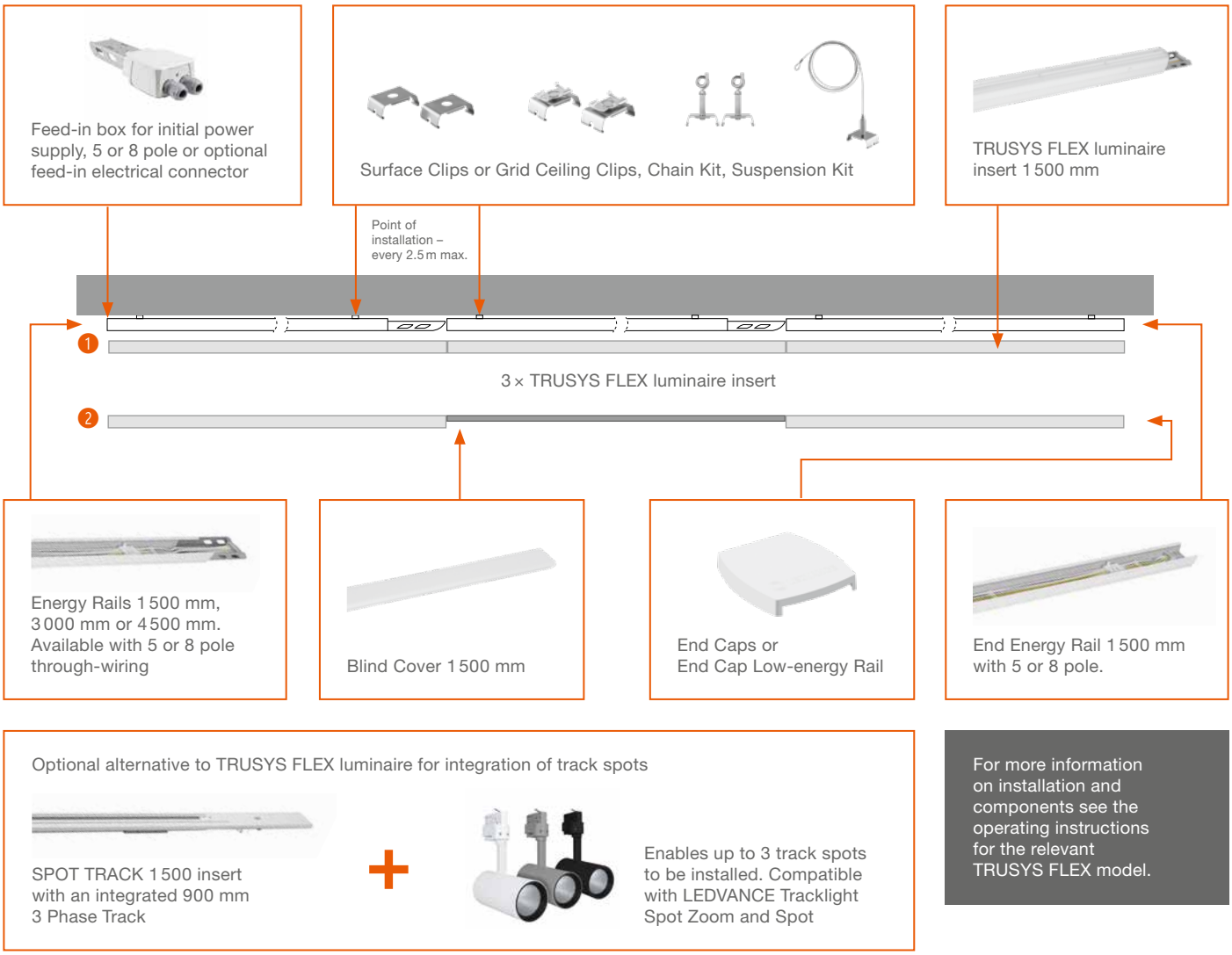

Optional alternative to TRUSYS FLEX luminaire for integration of track spots

SPOT TRACK 1 500 insert with an integrated 900 mm 3 Phase Track

+

Enables up to 3 track spots to be installed. Compatible with LEDVANCE Tracklight Spot Zoom and Spot

For more information on installation and components see the operating instructions for the relevant TRUSYS FLEX model.

FOR INSTALLATION YOU WILL NEED:

- 1 × TRUSYS FLEX Feed-in Box/Feed-in electrical connector (5 or 8 pole)
- X × TRUSYS FLEX Energy Rail 5 or 8 pole
- 1 × TRUSYS FLEX End Energy Rail
- X × TRUSYS FLEX LED luminaire insert (TRUSYS FLEX Blind Cover as required)
- X × TRUSYS FLEX Spot Track 1 500 insert (optional)
- X × Accessories depending on type of mounting (surface or suspended)
- 1 × Set TRUSYS FLEX End Cap Energy Rail or End Cap Low-energy Rail

TRUSYS FLEX REQUIREMENTS TABLE

Requirements table for sample strip lighting when allocating luminaire inserts to every second insert adapter (50 %) or every third insert adapter (33 %) on the mounting rails (Energy Rail). Additional configurations are of course also possible, for example with no insert adapters (100 %). For a precise light planning for your project, please contact your sales representative.

50 %

Length of strip lighting	TRUSYS FLEX luminaire insert	Blind cover	3 m rail	1.5 m rail	End rail	Min. installation points[1]	Feed-in	End caps
4.5 m	2	1	1	0	1	2	1	2
7.5 m	3	2	2	0	1	3	1	2
10.5 m	4	3	3	0	1	4	1	2
13.5 m	5	4	4	0	1	5	1	2
16.5 m	6	5	5	0	1	6	1	2
19.5 m	7	6	6	0	1	7	1	2
22.5 m	8	7	7	0	1	8	1	2
25.5 m	9	8	8	0	1	9	1	2
28.5 m	10	9	9	0	1	10	1	2
31.5 m	11	10	10	0	1	11	1	2
34.5 m	12	11	11	0	1	12	1	2
37.5 m	13	12	12	0	1	13	1	2
40.5 m	14	13	13	0	1	14	1	2
43.5 m	15	14	14	0	1	15	1	2
46.5 m	16	15	15	0	1	16	1	2
49.5 m	17	16	16	0	1	17	1	2

33 %

Length of strip lighting	TRUSYS FLEX luminaire insert	Blind cover	3 m rail	1.5 m rail	End rail	Min. installation points[1]	Feed-in	End caps
6.0 m	2	2	1	1	1	3	1	2
10.5 m	3	4	3	0	1	4	1	2
15.0 m	4	6	4	1	1	6	1	2
19.5 m	5	8	5	0	1	7	1	2
24.0 m	6	10	7	1	1	9	1	2
28.5 m	7	12	9	0	1	10	1	2
33.0 m	8	14	10	1	1	12	1	2
37.5 m	9	16	12	0	1	13	1	2
42.0 m	10	18	13	1	1	15	1	2
46.5 m	11	20	15	0	1	16	1	2
51.0 m	12	22	16	1	1	18	1	2

Luminaire insert 1 500 mm

Blind cover 1 500 mm

All figures mentioned are based on a single installation; deviations from the content possible as per EAN. For precise light planning for your project, please contact your sales representative.
[1] Calculation based on a distance of 0.75 m from the start and end of the rail to the first and last installation point. Additional installation points every 3 m max.

DAMP-PROOF LUMINAIRES

FIRST-CLASS LIGHTING AND EASY INSTALLATION – STANDING OUT IN DEMANDING ENVIRONMENTS

DAMP PROOF COMPACT GEN 1

- Easy access to the terminal thanks to the twist and lock mechanism on the end cap
- Movable mounting bracket over the full length allows use of old drill holes
- Fast rewiring thanks to integrated through-wiring

D

PERFOR-MANCE CLASS

Page 154

DAMP PROOF COMPACT GEN 2

- Highly versatile due to available power select versions that allow 2 different lumen packages
- Easy access to electrical terminal thanks to end caps with twist and lock mechanism
- Tool-free electrical connection due to push button connector

D

VALUE CLASS

Page 156

DAMP PROOF GEN 2

DAMP PROOF | DAMP PROOF DALI | DAMP PROOF 5X THROUGHWIRING
DAMP PROOF EMERGENCY | DAMP PROOF SENSOR

- Wide range of applications (switchable, DALI, through-wired, battery for safety lighting)
- Flexible use through extensive mounting and suspension accessories (included)
- No risk of electrostatic discharge through integration of the LED module into the luminaire cover

D

PERFOR-MANCE CLASS

Page 158

DAMP PROOF SPECIAL GEN 2

- Completely sealed for use in agricultural applications
- Also usable in uncovered outdoor areas
- Via the rotatable mounting the luminaire can be fixed in any position for optimal light steering

D

PERFOR-MANCE CLASS

Page 164

DAMP PROOF HOUSING GEN 3

DAMP PROOF HOUSING | DAMP PROOF HOUSING ACCESSORIES

- Sustainable solution thanks to replaceable lamps
- Prewired for easy installation of tubular AC LED lamps
- Robust housing

PERFOR-MANCE CLASS

Page 166

DAMP PROOF SLIM VALUE

- Homogeneous quality of light with a wide beam angle
- Simple installation thanks to mounting clips that can be freely positioned on the luminaire
- Easy access to the terminal thanks to the snap-on mechanism on the end cap

D

VALUE CLASS

Page 170

DAMP PROOF VALUE

- Uniform distribution of light
- Energy savings of up to 50 % (compared with luminaires that use fluorescent lamps)
- Easy installation and tool-free connection

D

VALUE CLASS

Page 172

THE RIGHT DAMP-PROOF LUMINAIRE FOR EVERY OCCASION

Discover now our broad portfolio which can be used for almost any standard application: In addition to classic versions, our range includes modern design luminaires – both in Performance Class and Value Class. There's also our Damp Proof Special with exceptional performance which is perfect for demanding environments.

OUR LEDVANCE DAMP PROOFS ARE EASY TO MOUNT

Damp Proof Compact

INSTALLATION IN NO TIME AT ALL USING THE DAMP PROOF COMPACT AS AN EXAMPLE

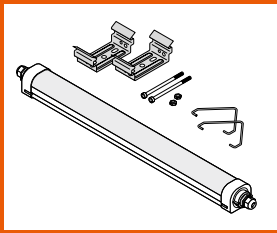

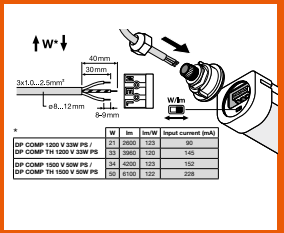

	W	lm	lm/W	Input current (mA)
DP COMP 1200 V 33W PS / DP COMP TH 1200 V 33W PS	21	2600	123	90
	33	3960	120	145
DP COMP 1500 V 50W PS / DP COMP TH 1500 V 50W PS	34	4200	123	152
	50	6100	122	228

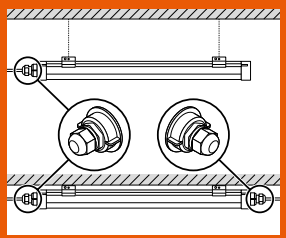

The end caps with their "Twist and Lock" mechanism allow for quick tool-free electrical connection.

THROUGH-WIRING OF DAMP PROOFS AT A GLANCE

	Material	Application	Lifetime[1] Guarantee[2]	One-sided connection	3 × 1.5 mm² through-wiring preinstalled	5 × 2.5 mm² through-wiring preinstalled	DALI	Lumen/power selection switch	Emergency lighting function
DP Special	PMMA		50 000 h L80 5 years		✓				
DP Compact Gen 1	PC, stainless steel		up to 50 000 h L70 5 years		✓				
DP Compact Gen 2	PC, stainless steel		up to 50 000h L80 5 years	✓	✓			✓	
DP Slim Value	PC, stainless steel		up to 30 000 h L70 3 years	✓					
DP Gen 2	PC, stainless steel		up to 50 000 h L80 5 years	✓	Through-wiring possible[3]	32 W 4 000 K 46 W 4 000 K[4]	✓	81 W 4 000 K[5] 81 W 4 000 K[5]	✓
DP Value	PC, stainless steel		up to 50 000 h L70 3 years	✓	Through-wiring possible[3]	Through-wiring possible[3]			
DP Housing Gen 3	PC, stainless steel		5 years	✓	Through-wiring possible[3]	Possible via separate kit	✓		✓

[1] t [h]: L70/B50 @ 25 °C (T_a) / t [h]: L80/B10 @ 25 °C (T_a) | [2] For precise terms and conditions go to www.ledvance.com/guarantee | [3] The product is technically equipped for through-wiring. Additional components may be required. Please refer to the operating instructions for accessories included. | [4] Through-Wiring kit also available separately for standard DP Gen 2 products
[5] 4 × lumen/power selection

Other wiring & driver combinations are possible via special request for Damp Proof Gen 2, VALUE and Housing Gen 3.

DAMP PROOF COMPACT GEN 1

Damp-proof luminaire, through-wired (L, N, E)

PRODUCT FEATURES

- Polycarbonate housing with stainless steel mounting brackets and suspension and anti-theft kit
- Through-wiring cable 3 × 1.5 mm² already installed
- Type of protection: IP66
- Ambient temperature in operation: –30…+50 °C
- High luminous efficacy: up to 120 lm/W

PRODUCT BENEFITS

- Easy access to electrical terminal thanks end caps with twist and lock mechanism
- Movable mounting bracket over the full length allows use of old drill holes
- Fast rewiring thanks to integrated through-wiring
- Tool-free electrical connection due to push button connector
- 5 years guarantee

AREAS OF APPLICATION

- Industrial and storage facilities
- Car parks and underpasses
- Garages
- Workshops, assembly lines

EQUIPMENT / ACCESSORIES

- Stainless steel clamps with safety screws included
- Mounting accessories included (suspension kit, theft protection kit)

FURTHER PRODUCT DETAILS

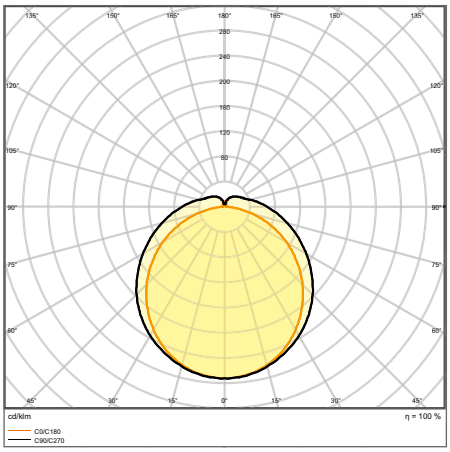

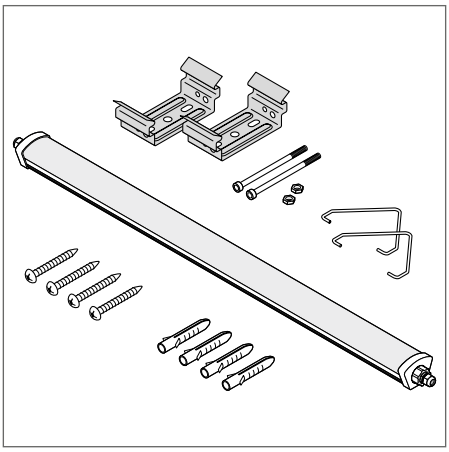

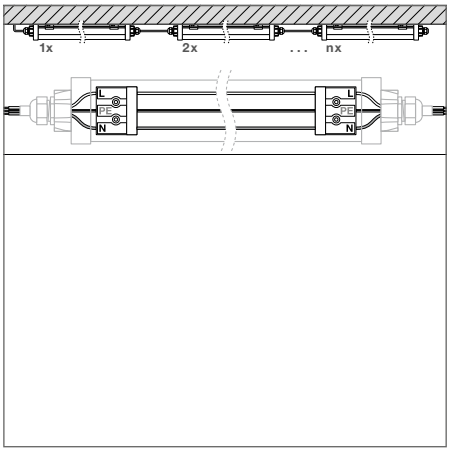

DP COMPACT 1500 55 W 4000K IP66 GR

The pictures shown in the catalog are for illustration purposes only. For information on size and color, please refer to the product table.

DAMP PROOF COMPACT GEN 1

Damp-proof luminaire, through-wired (L, N, E)

PERFOR-MANCE CLASS

CRI >80 | IP66 | IK08 | LEDVANCE 5 year guarantee [1]

Product name	EAN (GTIN)	El.nr.	Replacement for	W	lm	lm/W	K	L80 [2]	∠°	L × W × H [mm] Ø × H [mm]
DP COMPACT 1200 23W/3000K IP66 GR	4058075**424227**	**3304031**	1 × 36 W FL	23	2600	115	3000	35000	120	1290 × 86 × 68
DP COMPACT 1200 23 W 4000K IP66 GR	4058075**210028**	**3304015**	1 × 36 W FL	23	2800	120	4000	35000	120	1290 × 86 × 68
DP COMPACT 1200 44W/3000K IP66 GR	4058075**424241**	**3304032**	2 × 36 W FL	44	5100	115	3000	35000	120	1290 × 86 × 68
DP COMPACT 1200 44 W 4000K IP66 GR	4058075**210042**	**3304016**	2 × 36 W FL	44	5400	120	4000	35000	120	1290 × 86 × 68
DP COMPACT 1200 44 W 6500K IP66 GR	4058075**210066**	**3304017**	2 × 36 W FL	44	5400	120	6500	35000	120	1290 × 86 × 68
DP COMPACT 1500 31W/3000K IP66 GR	4058075**424265**	**3304033**	1 × 58 W FL	31	3500	115	3000	35000	120	1590 × 86 × 68
DP COMPACT 1500 31 W 4000K IP66 GR	4058075**210080**	**3304018**	1 × 58 W FL	31	3800	120	4000	35000	120	1590 × 86 × 68
DP COMPACT 1500 55W/3000K IP66 GR	4058075**424289**	**3304034**	2 × 58 W FL	55	6300	115	3000	35000	120	1590 × 86 × 68
DP COMPACT 1500 55 W 4000K IP66 GR	4058075**210103**	**3304019**	2 × 58 W FL	55	6700	120	4000	35000	120	1590 × 86 × 68
DP COMPACT 1500 55 W 6500K IP66 GR	4058075**210127**	**3304020**	2 × 58 W FL	55	6700	120	6500	35000	120	1590 × 86 × 68

[1] Refer to www.ledvance.com/guarantee for precise conditions
[2] t[h]: L70/B50 @ 25 °C (T_a)/t[h]: L80/B10 @ 25 °C (T_a)

DAMP PROOF COMPACT GEN 2

Modern damp-proof luminaires with lumen-switchable versions

PRODUCT FEATURES

- Power select option available to select between 2 lumen packages
- Versions with preinstalled 3 × 1.5 mm² through-wiring available
- Lifetime (L80/B10): up to 50 000 h (at 25 °C)
- High luminous efficacy: up to 123 lm/W
- Polycarbonate housing IP66 and IK08
- Beam angle: 120°

PRODUCT BENEFITS

- Highly versatile due to available power select versions that allow 2 different lumen packages
- Excellently usable in bigger installations due to preinstalled through-wiring (3 × 1.5 mm²)
- Easy access to electrical terminal thanks to end caps with twist and lock mechanism
- Tool-free electrical connection due to push button connector
- Evenly distributed light
- 5 years guarantee

AREAS OF APPLICATION

- Industrial and storage facilities
- Car parks and underpasses
- Garages
- Workshops, assembly lines

EQUIPMENT / ACCESSORIES

- Stainless steel clamps with safety screws included
- Mounting accessories included (suspension kit, theft protection kit)

FURTHER PRODUCT DETAILS

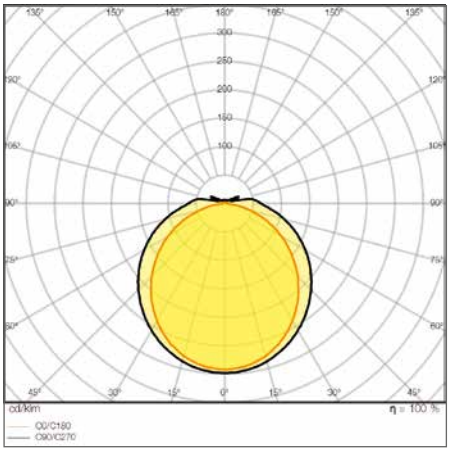

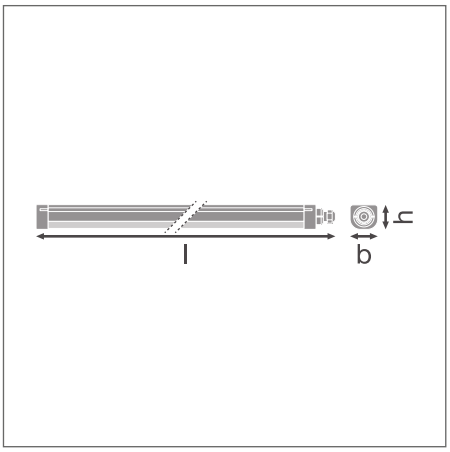

DP COMP 1200 V 33W 840 IP66 PS

The pictures shown in the catalog are for illustration purposes only. For information on size and color, please refer to the product table.

FURTHER PRODUCT DETAILS

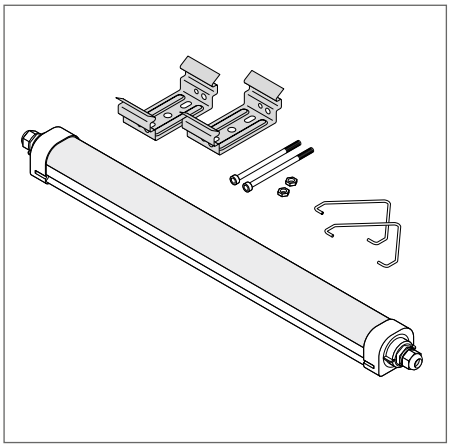

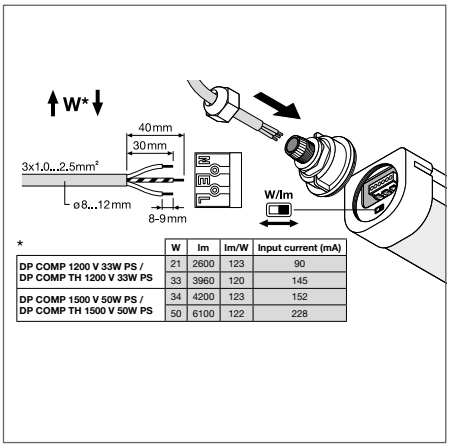

*

	W	lm	lm/W	Input current (mA)
DP COMP 1200 V 33W PS / DP COMP TH 1200 V 33W PS	21	2600	123	90
	33	3960	120	145
DP COMP 1500 V 50W PS / DP COMP TH 1500 V 50W PS	34	4200	123	152
	50	6100	122	228

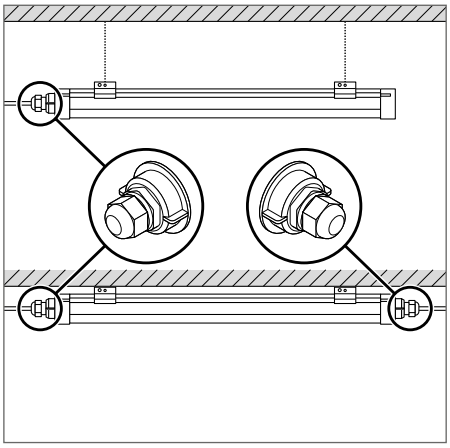

DAMP PROOF COMPACT GEN 2

Modern damp-proof luminaires with lumen-switchable versions

VALUE CLASS | TÜV SÜD | FLICKER VALUE <10% | CRI ≥80 | IP66 | IK08 | LEDVANCE 5 year guarantee [1]

Product name	EAN (GTIN)	El.nr.	Replacement for	W	lm	lm/W	K	L70 [2]	∠°	L × W × H [mm] Ø × H [mm]
DP Comp 600 V 16W 840 IP66	4058075**740853**	**3310217**	2 × 18W FL	16	1920	120	4000	75000	120	643 × 60 × 53
DP Comp 1200 V 33W 840 IP66 PS	4058075**740877**	**3310218**	2 × 36W FL	33	3960	123	4000	75000	120	1243 × 60 × 53
DP Comp 1500 V 50W 840 IP66 PS	4058075**740891**	**3310219**	2 × 58W FL	50	6100	123	4000	75000	120	1543 × 60 × 53

DAMP PROOF COMPACT THROUGHWIRING GEN 2

Modern damp-proof luminaires with through-wiring and lumen-switchable versions

VALUE CLASS | TÜV SÜD | FLICKER VALUE <10% | CRI ≥80 | IP66 | IK08 | LEDVANCE 5 year guarantee [1]

Product name	EAN (GTIN)	El.nr.	Replacement for	W	lm	lm/W	K	L70 [2]	∠°	L × W × H [mm] Ø × H [mm]
DP Comp TH 1200 V 33W 840 IP66 PS	4058075**740914**	**3310220**	2 × 36W FL	33	3960	123	4000	75000	120	1285 × 60 × 53
DP Comp TH 1200 V 33W 865 IP66 PS	4058075**740952**	—	2 × 36W FL	33	3960	123	6500	75000	120	1285 × 60 × 53
DP Comp TH 1500 V 50W 840 IP66 PS	4058075**740938**	**3310221**	2 × 58W FL	50	6100	123	4000	75000	120	1585 × 60 × 53
DP Comp TH 1500 V 50W 865 IP66 PS	4058075**740976**	—	2 × 58W FL	50	6100	123	6500	75000	120	1585 × 60 × 53
DP Comp TH 1500 V 62W 840 IP66	4058075**740990**	**3310222**	3 × 58W FL	62	7500	120	4000	55000	120	1585 × 60 × 53

[1] Refer to www.ledvance.com/guarantee for precise conditions
[2] t[h]: L70/B50 @ 25 °C (T_a) / t[h]: L80/B10 @ 25 °C (T_a)

DAMP PROOF GEN 2

Damp-proof luminaires

PRODUCT FEATURES

- Polycarbonate housing with stainless steel mounting brackets and suspension and anti-theft kit
- Available as switchable, 5 × 2.5 mm² through-wired, DALI and emergency 3h battery
- Type of protection: IP65
- Ambient temperature range during operation: –25 °C to +40 °C
- High luminous efficacy: up to 135 lm/W

PRODUCT BENEFITS

- Wide range of applications (switchable, DALI, through-wired, battery for safety lighting)
- Flexible use through extensive mounting and suspension accessories (included)
- D-marking for mounting on surfaces with limited surface temperature
- Energy savings of up to 60 % (compared to luminaires that use fluorescent lamps)
- All versions with 5-year guarantee, except emergency version: 3 years (built-in 3h battery)

AREAS OF APPLICATION

- Industrial and storage facilities
- Car parks and underpasses
- Garages
- Workshops, assembly lines

EQUIPMENT / ACCESSORIES

- Stainless steel clamps with safety screws included
- Mounting accessories included (suspension kit, theft protection kit)

FURTHER PRODUCT DETAILS

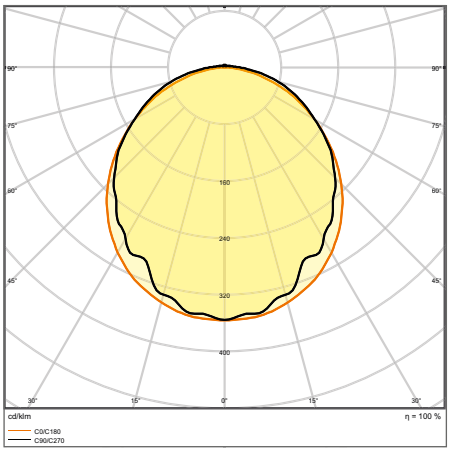

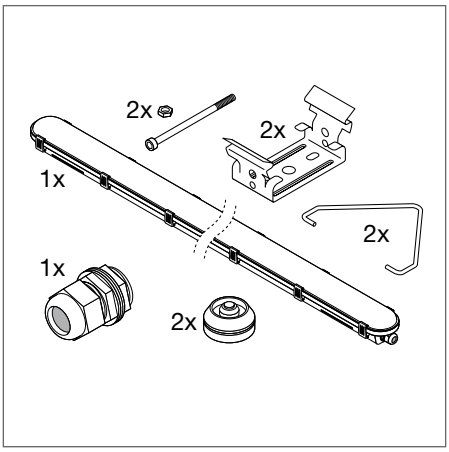

DP 1500 81W 840 IP65 GY DP 1500 81W 865 IP65 GY	PIN1 (ON ⟷ OFF)	PIN2 (ON ⟷ OFF)	W	lm
230V LED	ON	ON	81	11000
	ON	OFF	69	9600
	OFF	ON	57	8200
	OFF	OFF	46	6600

DP 1200 18 W 4000 K IP65 GY

The pictures shown in the catalog are for illustration purposes only. For information on size and color, please refer to the product table.

DAMP PROOF ON/OFF + DALI

Damp-proof luminaires, classic shape

PERFORMANCE CLASS | VIVA RES | ENEC[1] | TÜV SÜD[1] | D | FLICKER VALUE <10% | CRI >80 | IP65 | IK08 | LEDVANCE 5 year guarantee[2]

Product name	EAN (GTIN)	El.nr.	Replacement for	W	lm	lm/W	K	L80[3]	°		L × W × H [mm] Ø × H [mm]
DP 1200 18W 840 IP65 GY	4058075**541047**	**3304039**	1 × 36 W FL	18	2400	135	4000	50000	110	—	1200 × 82 × 68
DP 1200 18W 865 IP65 GY	4058075**541061**	—	1 × 36 W FL	18	2400	135	6500	50000	110	—	1200 × 82 × 68
DP 1200 32W 830 IP65 GY	4058075**541085**	**3304040**	2 × 36 W FL	32	4000	125	3000	50000	110	—	1200 × 82 × 68
DP 1200 32W 840 IP65 GY	4058075**541108**	**3304041**	2 × 36 W FL	32	4400	135	4000	50000	110	—	1200 × 82 × 68
DP 1200 32W 865 IP65 GY	4058075**541122**	**3304042**	2 × 36 W FL	32	4400	135	6500	50000	110	—	1200 × 82 × 68
DP 1500 26W 840 IP65 GY	4058075**541146**	**3304043**	1 × 58 W FL	26	3500	135	4000	50000	110	—	1500 × 82 × 68
DP 1500 26W 865 IP65 GY	4058075**541160**	—	1 × 58 W FL	26	3500	115	6500	50000	110	—	1500 × 82 × 68
DP 1500 46W 830 IP65 GY	4058075**541184**	**3304044**	2 × 58 W FL	46	5750	125	3000	50000	110	—	1500 × 82 × 68
DP 1500 46W 840 IP65 GY	4058075**541207**	**3304045**	2 × 58 W FL	46	6400	135	4000	50000	110	—	1500 × 82 × 68
DP 1500 46W 865 IP65 GY	4058075**541221**	**3304046**	2 × 58 W FL	46	6400	135	6500	50000	110	—	1500 × 82 × 68
DP 1500 58W 840 IP65 GY	4058075**541245**	**3304047**	2 × 70 W FL	58	8000	135	4000	50000	110	—	1500 × 82 × 68
DP 1500 58W 865 IP65 GY	4058075**541269**		2 × 70 W FL	58	8000	135	6500	50000	110	—	1500 × 82 × 68
DP 1500 81W 840 IP65 GY	4058075**541283**	**3304048**	2 × 80 W FL	81	11000	135	4000	50000	110	—	1500 × 82 × 68
DP 1500 81W 865 IP65 GY	4058075**541306**	**3304049**	2 × 80 W FL	81	11000	135	6500	50000	110	—	1500 × 82 × 68
DP DALI 1200 18W 840 IP65 GY	4058075**541641**	**3304052**	1 × 36 W FL	18	2400	135	4000	50000	110	DALI-2	1200 × 82 × 68
DP DALI 1200 18W 865 IP65 GY	4058075**541665**	—	1 × 36 W FL	18	2400	135	6500	50000	110	DALI-2	1200 × 82 × 68
DP DALI 1200 32W 830 IP65 GY	4058075**541689**	—	2 × 36 W FL	32	4000	125	3000	50000	110	DALI-2	1200 × 82 × 68
DP DALI 1200 32W 840 IP65 GY	4058075**541702**	**3304053**	2 × 36 W FL	32	4400	135	4000	50000	110	DALI-2	1200 × 82 × 68
DP DALI 1200 32W 865 IP65 GY	4058075**541726**	—	1 × 36 W FL	32	4000	125	6500	50000	110	DALI-2	1200 × 82 × 68
DP DALI 1500 26W 840 IP65 GY	4058075**541740**	**3304054**	1 × 58 W FL	26	3500	135	4000	50000	110	DALI-2	1500 × 82 × 68
DP DALI 1500 26W 865 IP65 GY	4058075**541764**	—	1 × 58 W FL	26	3500	135	6500	50000	110	DALI-2	1500 × 82 × 68
DP DALI 1500 46W 830 IP65 GY	4058075**541788**	—	2 × 58 W FL	46	5750	125	3000	50000	110	DALI-2	1500 × 82 × 68
DP DALI 1500 46W 840 IP65 GY	4058075**541801**	**3304055**	2 × 58 W FL	46	6400	135	4000	50000	110	DALI-2	1500 × 82 × 68
DP DALI 1500 46W 865 IP65 GY	4058075**541825**	—	2 × 58 W FL	46	6400	135	6500	50000	110	DALI-2	1500 × 82 × 68
DP DALI 1500 58W 840 IP65 GY	4058075**541849**	**3304056**	2 × 70 W FL	58	8000	135	4000	50000	110	DALI-2	1500 × 82 × 68
DP DALI 1500 58W 865 IP65 GY	4058075**541863**	—	2 × 70 W FL	58	8000	135	6500	50000	110	DALI-2	1500 × 82 × 68

DAMP PROOF 5X THROUGHWIRING

Damp-proof luminaires, classic shape with 5 × 2.5 mm² through-wiring

PERFORMANCE CLASS | ENEC[1] | TÜV SÜD[1] | D | FLICKER VALUE <10% | CRI >80 | IP65 | IK08 | LEDVANCE 5 year guarantee[2]

Product name	EAN (GTIN)	El.nr.	Replacement for	W	lm	lm/W	K	L80[3]	°	L × W × H [mm] Ø × H [mm]
DP 5TH 1200 32W 840 IP65 GY	4058075**541924**	**3304050**	2 × 36 W FL	32	4400	135	4000	50000	110	1200 × 82 × 68
DP 5TH 1500 46W 840 IP65 GY	4058075**541948**	**3304051**	2 × 58 W FL	46	6400	135	4000	50000	110	1500 × 82 × 68

[1] The Damp Proof luminaires are certified as follows: On /Off, DALI and through-wiring versions: TÜV Süd and ENEC, Emergency versions: CE.
[2] Refer to www.ledvance.com/guarantee for precise conditions
[3] t[h]: L70/B50 @ 25 °C (T_a)/t[h]: L80/B10 @ 25 °C (T_a)

DAMP PROOF EMERGENCY

Damp-proof luminaires, classic shape with integrated emergency lighting function

PERFOR-MANCE CLASS

D | FLICKER VALUE <10% | CRI >80 | IP65 | IK08 | LEDVANCE 3 year guarantee [1]

Product name	EAN (GTIN)	El.nr.	Replacement for	W	lm	lm/W	K	L80 [2]	°	L × W × H [mm] Ø × H [mm]
DP EM 1200 18W 840 IP65 GY	4058075**541320**	—	1 × 36 W FL	18	2400	135	4000	50000	110	1200 × 82 × 68
DP EM 1200 18W 865 IP65 GY	4058075**541344**	—	1 × 36 W FL	18	2400	135	6500	50000	110	1200 × 82 × 68
DP EM 1200 32W 830 IP65 GY	4058075**541368**	—	2 × 36 W FL	32	4000	125	3000	50000	110	1200 × 82 × 68
DP EM 1200 32W 840 IP65 GY	4058075**541382**	**3304057**	2 × 36 W FL	32	4400	135	4000	50000	110	1200 × 82 × 68
DP EM 1200 32W 865 IP65 GY	4058075**541405**	—	2 × 36 W FL	32	4400	125	6500	50000	110	1200 × 82 × 68
DP EM 1500 26W 840 IP65 GY	4058075**541429**	—	1 × 58 W FL	26	3500	150	4000	50000	110	1500 × 82 × 68
DP EM 1500 26W 865 IP65 GY	4058075**541443**	—	1 × 58 W FL	26	3500	135	6500	50000	110	1500 × 82 × 68
DP EM 1500 46W 830 IP65 GY	4058075**541467**	—	2 × 58 W FL	46	5750	125	3000	50000	110	1500 × 82 × 68
DP EM 1500 46W 840 IP65 GY	4058075**541481**	**3304058**	2 × 58 W FL	46	6400	135	4000	50000	110	1500 × 82 × 68
DP EM 1500 46W 865 IP65 GY	4058075**541504**	—	2 × 58 W FL	46	6400	135	6500	50000	110	1500 × 82 × 68
DP EM 1500 58W 840 IP65 GY	4058075**541528**	—	2 × 70 W FL	58	8000	135	4000	50000	110	1500 × 82 × 68
DP EM 1500 58W 865 IP65 GY	4058075**541542**	—	2 × 70 W FL	58	8000	135	6500	50000	110	1500 × 82 × 68
DP EM 1500 81W 840 IP65 GY	4058075**541566**	—	2 × 80 W FL	81	11000	135	4000	50000	110	1500 × 82 × 68
DP EM 1500 81W 865 IP65 GY	4058075**541580**	—	2 × 80 W FL	81	11000	135	6500	50000	110	1500 × 82 × 68

EMERGENCY LIGHTING PROPERTIES

Product name	Battery life in emergency operation mode	Type of emergency operation test	Type of emergency light operation	Luminous flux in emergency operation mode	Type of Battery
DP EM 1200 18W 840 IP65 GY	3 h	Automatic	Maintained/Non-maintained	500 lm	LiFePO4
DP EM 1200 18W 865 IP65 GY	3 h	Automatic	Maintained/Non-maintained	500 lm	LiFePO4
DP EM 1200 32W 830 IP65 GY	3 h	Automatic	Maintained/Non-maintained	500 lm	LiFePO4
DP EM 1200 32W 840 IP65 GY	3 h	Automatic	Maintained/Non-maintained	500 lm	LiFePO4
DP EM 1200 32W 865 IP65 GY	3 h	Automatic	Maintained/Non-maintained	500 lm	LiFePO4
DP EM 1500 26W 840 IP65 GY	3 h	Automatic	Maintained/Non-maintained	500 lm	LiFePO4
DP EM 1500 26W 865 IP65 GY	3 h	Automatic	Maintained/Non-maintained	500 lm	LiFePO4
DP EM 1500 46W 830 IP65 GY	3 h	Automatic	Maintained/Non-maintained	500 lm	LiFePO4
DP EM 1500 46W 840 IP65 GY	3 h	Automatic	Maintained/Non-maintained	500 lm	LiFePO4
DP EM 1500 46W 865 IP65 GY	3 h	Automatic	Maintained/Non-maintained	500 lm	LiFePO4
DP EM 1500 58W 840 IP65 GY	3 h	Automatic	Maintained/Non-maintained	500 lm	LiFePO4
DP EM 1500 58W 865 IP65 GY	3 h	Automatic	Maintained/Non-maintained	500 lm	LiFePO4
DP EM 1500 81W 840 IP65 GY	3 h	Automatic	Maintained/Non-maintained	500 lm	LiFePO4
DP EM 1500 81W 865 IP65 GY	3 h	Automatic	Maintained/Non-maintained	500 lm	LiFePO4

[1] Refer to www.ledvance.com/guarantee for precise conditions
[2] t[h]: L70/B50 @ 25 °C (T_a)/t[h]: L80/B10 @ 25 °C (T_a)

DAMP PROOF SENSOR

Damp-proof luminaires, classic shape with high frequency sensor

PRODUCT FEATURES

- High frequency sensor for daylight and motion detection
- Sensor with leader-follower and leader-leader functionality
- High luminous efficacy: up to 139 lm/W
- Beam angle: 110 °

PRODUCT BENEFITS

- Installation of multiple sensor switched luminaires possible due to leader-follower and leader-leader functionality
- Multiple adjustments of sensor range, daylight detection and hold time
- Low flicker ≤ 10 %
- Easy installation, no tools required for connection
- 5 years guarantee

AREAS OF APPLICATION

- Industrial and storage facilities
- Car parks and underpasses
- Garages
- Workshops, assembly lines

EQUIPMENT / ACCESSORIES

- Accessories for several mounting options available as optional separate accessory
- Mounting brackets, antitheft protection, triangle, 2nd cable gland and 2 grommets included

FURTHER PRODUCT DETAILS

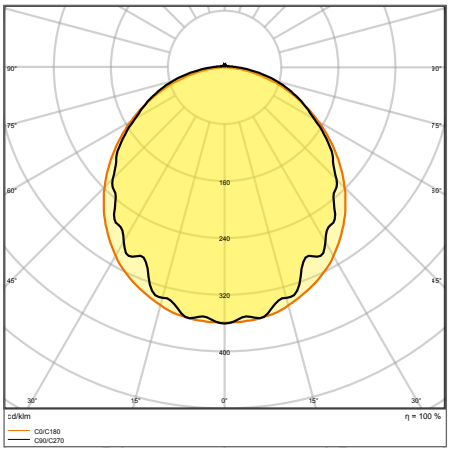

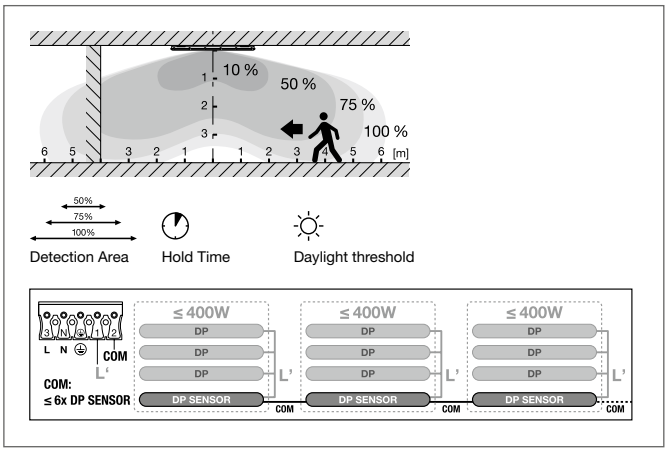

DP S 1200 32W 840 IP65 GY

The pictures shown in the catalog are for illustration purposes only. For information on size and color, please refer to the product table.

DAMP PROOF SENSOR

Damp-proof luminaires, classic shape with high frequency sensor

PERFOR-MANCE CLASS | D | FLICKER VALUE <10 % | CRI >80 | IP65 | IK08 | LEDVANCE 5 year guarantee [1]

Product name	EAN (GTIN)	El.nr.	Replacement for	W	lm	lm/W	K	L80 [2]	°	L × W × H [mm] Ø × H [mm]
DP S 1200 32W 840 IP65 GY	4058075**541962**	**3311401**	2 × 36 W FL	32	4 400	138	4 000	50000	110	1 200 × 82 × 68
DP S 1500 46W 840 IP65 GY	4058075**541986**	**3311402**	2 × 58 W FL	46	6 400	139	4 000	50000	110	1 500 × 82 × 68
DP S 1500 58W 840 IP65 GY	4058075**542006**	**3311403**	2 × 70 W FL	58	8 000	138	4 000	50000	110	1 500 × 82 × 68

SENSOR PROPERTIES

Product name	Type of sensor	Sensor technology	Detection threshold of daylight sensor	Detection range of motion sensor	Sensor detection angle	Sensor controlled switching time
DP S 1200 32W 840 IP65 GY	Motion/Light	Microwave	2…50 lx	6…14 m	110 °	5 s…15 min
DP S 1500 46W 840 IP65 GY	Motion/Light	Microwave	2…50 lx	6…14 m	110 °	5 s…15 min
DP S 1500 58W 840 IP65 GY	Motion/Light	Microwave	2…50 lx	6…14 m	110 °	5 s…15 min

[1] Refer to www.ledvance.com/guarantee for precise conditions
[2] t[h]: L70/B50 @ 25 °C (T_a)/t[h]: L80/B10 @ 25 °C (T_a)

DAMP PROOF SPECIAL GEN 2

Tubular damp-proof luminaire with extra high IP rating, ammonium-resistant and for outdoor applications

PRODUCT FEATURES

- Sealed housing made of PMMA
- Ammonium resistant
- Type of protection: IP67 (DIN EN 60529), IP69K (ISO 20653:2013)
- Through-wiring cable already installed in the luminaire

PRODUCT BENEFITS

- Completely sealed for use in agricultural applications
- Also usable in uncovered outdoor areas
- Via the rotatable mounting the luminaire can be fixed in any position for optimal light steering
- Easy installation as mounting brackets can be positioned freely on the luminaire
- 5 years guarantee

AREAS OF APPLICATION

- Keeping farm animals except poultry
- Food industry
- Open car parks and underpasses
- Garages
- Workshops, assembly lines

FURTHER PRODUCT DETAILS

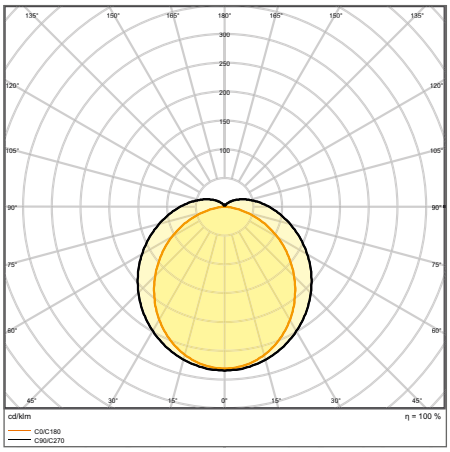

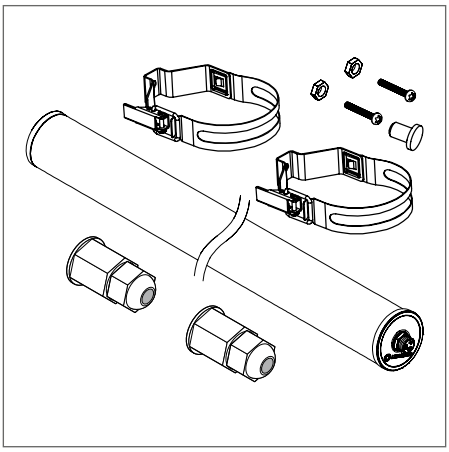

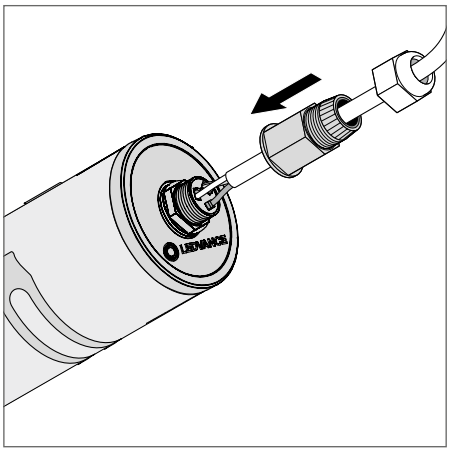

DP SPECIAL 1500 50 W 4000 K WT IP67

The pictures shown in the catalog are for illustration purposes only. For information on size and color, please refer to the product table.

DAMP PROOF SPECIAL GEN 2

Tubular damp-proof luminaire with extra high IP rating, ammonium-resistant and for outdoor applications

PERFOR-MANCE CLASS | FLICKER VALUE ≤5% | CRI ≥80 | IP67 | IK06 | LEDVANCE 5 year guarantee[1]

Product name	EAN (GTIN)	El.nr.	Replacement for	W	lm	lm/W	K	L80[2]	°	L × W × H [mm] Ø × H [mm]
DP SPECIAL 1200 22 W 4000 K WT IP67	4058075**452114**	**3304035**	1 × 36 W FL	22	2800	130	4000	50000	120	1200 × 82
DP SPECIAL 1200 42 W 4000 K WT IP67	4058075**452152**	**3304037**	2 × 36 W FL	42	5500	130	4000	50000	120	1200 × 82
DP SPECIAL 1500 30 W 4000 K WT IP67	4058075**452138**	**3304036**	1 × 58 W FL	30	3900	130	4000	50000	120	1500 × 82
DP SPECIAL 1500 50 W 4000 K WT IP67	4058075**452176**	**3304038**	2 × 58 W FL	50	6500	130	4000	50000	120	1500 × 82

[1] Refer to www.ledvance.com/guarantee for precise conditions
[2] t[h]: L70/B50 @ 25 °C (T_a)/t[h]: L80/B10 @ 25 °C (T_a)

DAMP PROOF HOUSING

Damp-proof luminaire for T8 LED lamps

PRODUCT FEATURES

- Luminaire housing, available for 1 or 2 T8 LED tubes
- Suitable for LED TUBE T8 EM and LED TUBE T8 CONNECTED
- Type of protection: IP65
- Integrated electrical fuse

PRODUCT BENEFITS

- Easy and quick installation
- Prewired for easy installation of tubular AC LED lamps
- Toolless installation
- Robust housing
- Sustainable solution thanks to exchangeable light sources
- 5 years guarantee

AREAS OF APPLICATION

- Parking lots, warehouses, production areas
- Car parks and underpasses
- Garages

EQUIPMENT / ACCESSORIES

- All required accessories included
- Through-wiring cable kit available

DAMP PROOF HOUSING GEN 3

Damp-proof luminaire for T8 LED lamps with tool-free luminaire connector

PERFOR-MANCE CLASS

TÜVRheinland CERTIFIED — Regular Production Surveillance Safety Type Approved — www.tuv.com ID 1111267276

IP65 IK08

LEDVANCE 5 year guarantee [1]

Product name	EAN (GTIN)	El.nr.		L × W × H [mm] Ø × H [mm]
DP HOUSING 600 P 1XLAMP IP65	4099854**118050**	**3310313**	G13	675 × 65 × 70
DP HOUSING 600 P 2XLAMP IP65	4099854**118074**	**3310314**	G13	675 × 95 × 70
DP HOUSING 1200 P 1XLAMP IP65	4099854**118098**	**3310315**	G13	1280 × 65 × 70
DP HOUSING 1200 P 2XLAMP IP65	4099854**118111**	**3310316**	G13	1280 × 95 × 70
DP HOUSING 1500 P 1XLAMP IP65	4099854**118159**	**3316051**	G13	1585 × 65 × 70
DP HOUSING 1500 P 2XLAMP IP65	4099854**118210**	**3316052**	G13	1585 × 95 × 70

[1] Refer to www.ledvance.com/guarantee for precise conditions
The pictures shown in the catalog are for illustration purposes only. For information on size and color, please refer to the product table.

DAMP PROOF HOUSING GEN 3 DALI

Damp-proof luminaire for dimmable LED TUBE

PERFOR-MANCE CLASS

IP65 IK08 LEDVANCE 5 year guarantee[1]

Product name	EAN (GTIN)	El.nr.			L × W × H [mm] Ø × H [mm]
DP HOUSING DALI 1200 P 1XLAMP IP65	4099854**146442**	—	G13	DALI-2	1280 × 65 × 70
DP HOUSING DALI 1200 P 2XLAMP IP65	4099854**146466**	—	G13	DALI-2	1280 × 95 × 70
DP HOUSING DALI 1500 P 1XLAMP IP65	4099854**146480**	—	G13	DALI-2	1585 × 65 × 70
DP HOUSING DALI 1500 P 2XLAMP IP65	4099854**146503**	—	G13	DALI-2	1585 × 95 × 70

DAMP PROOF HOUSING EMERGENCY

Damp-proof luminaire for emergency lighting application

PERFOR-MANCE CLASS

IP65 IK08 LEDVANCE 3 year guarantee[1]

Product name	EAN (GTIN)	El.nr.			L × W × H [mm] Ø × H [mm]
DP HOUSING EM 1200 P 1XLAMP IP65	4099854**148880**	—	G13	DALI-2	1280 × 65 × 70
DP HOUSING EM 1200 P 2XLAMP IP65	4099854**148903**	—	G13	DALI-2	1280 × 95 × 70
DP HOUSING EM 1500 P 1XLAMP IP65	4099854**148927**	—	G13	DALI-2	1585 × 65 × 70
DP HOUSING EM 1500 P 2XLAMP IP65	4099854**148941**	—	G13	DALI-2	1585 × 95 × 70

EMERGENCY LIGHTING PROPERTIES

Product name	Battery life in emergency operation mode	Type of emergency operation test	Type of emergency light operation	Luminous flux in emergency operation mode	Type of Battery
DP HOUSING EM 1200 P 1XLAMP IP65	3 h	Automatic	Maintained	330 lm	LiFePO4
DP HOUSING EM 1200 P 2XLAMP IP65	3 h	Automatic	Maintained	320 lm	LiFePO4
DP HOUSING EM 1500 P 1XLAMP IP65	3 h	Automatic	Maintained	330 lm	LiFePO4
DP HOUSING EM 1500 P 2XLAMP IP65	3 h	Automatic	Maintained	320 lm	LiFePO4

[1] Refer to www.ledvance.com/guarantee for precise conditions
The pictures shown in the catalog are for illustration purposes only. For information on size and color, please refer to the product table.

Find out more:
ledvance.com/tubes

THE DREAM TEAM FOR WAREHOUSES AND CAR PARKS

The LEDVANCE DAMP PROOF HOUSING is a functional and robust luminaire which is ideal for warehouse and car park applications with ceiling heights of up to 4 meters. But it gets even better. In combination with LEDVANCE LED TUBE T8 EM CONNECTED and the LEDVANCE CONNECTED SENSOR ST8 LOW BAY you can create an intelligent lighting system in no time.

Using the Zigbee 3.0 wireless standard, the motion sensor controls the coupled LED tubes without wiring. The result: light in the right place at the right time and significantly reduced energy consumption.

LEDVANCE LED TUBE T8 EM CONNECTED P

4058075824010 EAN (GTIN): Operation on CCG

Light on demand: intelligent control via a sensor reduces energy consumption.

- Communication via Zigbee 3.0
- Low-flicker according to EU 2019/2020 (SVM ≤ 0.4; $P_{st}LM$ ≤ 1)
- Glass tube with shatter protection thanks to special PET coating
- Only in connection with the LEDVANCE CONNECTED SENSOR ST8 LOW BAY (4058075232969 EAN (GTIN)): Installation height: up to 4 m

A STRONG COMBINATION, E. G. FOR LARGE INDOOR CAR PARKS:

LEDVANCE LED TUBE T8 EM CONNECTED P

LED tube, installed in the robust DAMP PROOF HOUSING (IP65), is connected wirelessly to **LEDVANCE CONNECTED SENSOR ST8 LOW BAY** via Zigbee. Two-stage switching (0 % ⇆ 100 % and 20 % ⇆ 100 %) increases efficiency even further.

ENERGY SAVINGS

Lighting technology	Net luminous flux	Number of luminaires	Luminaire wattage incl. losses	Connected load	Energy consumption per year	Energy savings vs old system
LED TUBE T8 EM CONNECTED P 24 W/4000K 1500 mm	3 600 lm	50	24 W	1 200 W	4 992 kWh	66 %*
Conventional: damp-proof luminaire T8 1 × 58 W	3 454 lm	50	70 W	3 500 W	14 560 kWh	

OPERATING DATA: Operation per year (days): 260 · Operation per day (hours): 16 · Estimated active times per day (hours): 8

The energy consumption refers to the LED lighting solution without LMS and does not take into account any lighting scenes or their dimming states.
* Assumed savings through LMS in relation to the new system with LEDs: 40 %; based on the following assumptions: Motion detector with comfort dimming 40 %. During operating times, the lighting system will only be dimmed down to 20 %. This is more comfortable for users because they do not have to enter the space in complete darkness. The assumptions made for the LMS savings calculations are approximate and are based on practical experience from the lighting industry. Energy savings through LMS always need to be calculated based on the specific project.

DAMP PROOF HOUSING ACCESSORIES

Through-wiring kits for DAMP PROOF HOUSING GEN 2 and GEN 3

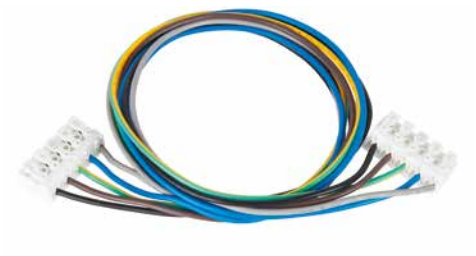

PRODUCT FEATURES

- Through-wiring kits with tool-free connectors

PRODUCT BENEFITS

- Easy installation and electrical connection thanks to tool-free electrical connectors

EQUIPMENT / ACCESSORIES

- 5 × 2.5 mm² cables with tool-free connectors, cable gland and cable holders
- All required accessories included

FURTHER PRODUCT DETAILS

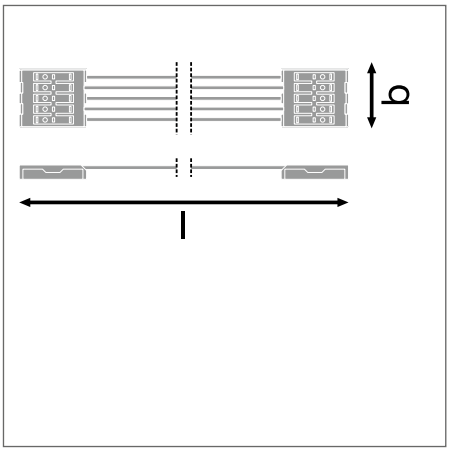

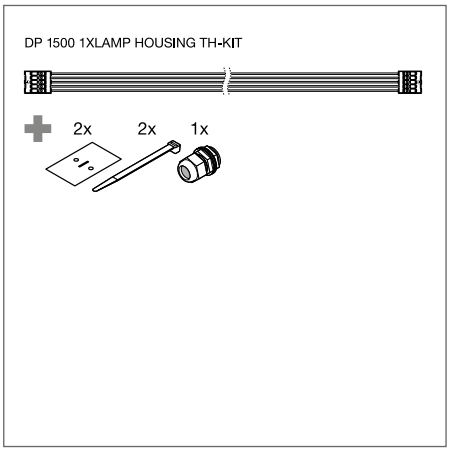

LEDVANCE 5 year guarantee [1]

Product name	EAN (GTIN)	El.nr.	L × W × H [mm] Ø × H [mm]	MATERIAL	COLOR
DP 1200 1XLAMP HOUSING TH-KIT 5X2.5LEDV	4058075**695078**	**3310223**	1150 × 27 × 16	Polycarbonate (PC)	Multicolored
DP 1500 1XLAMP HOUSING TH-KIT 5X2.5LEDV	4058075**695092**	**3310224**	1450 × 27 × 16	Polycarbonate (PC)	Multicolored
DP 1200 2XLAMP HOUSING TH-KIT 5X2.5LEDV	4058075**695115**	**3310225**	1150 × 50 × 23	Polycarbonate (PC)	Multicolored
DP 1500 2XLAMP HOUSING TH-KIT 5X2.5LEDV	4058075**695139**	**3310226**	1450 × 50 × 23	Polycarbonate (PC)	Multicolored

[1] Refer to www.ledvance.com/guarantee for precise conditions
The pictures shown in the catalog are for illustration purposes only. For information on size and color, please refer to the product table.

DAMP PROOF SLIM VALUE

Damp-proof luminaire with slim housing

PRODUCT FEATURES

- Polycarbonate housing with stainless steel mounting brackets and suspension and anti-theft kit
- Type of protection: IP65
- Wide beam angle: 120°
- High luminous efficacy: up to 110 lm/W

PRODUCT BENEFITS

- Homogeneous quality of light with a wide beam angle
- Easy installation as mounting brackets can be positioned freely on the luminaire
- Easy access to electrical terminal thanks end caps with clip mechanism
- Elegant, slim design
- Tool-free electrical connection due to push button connector

AREAS OF APPLICATION

- Industrial and storage facilities
- Car parks and underpasses
- Garages
- Workshops, assembly lines

EQUIPMENT / ACCESSORIES

- Stainless steel clamps with safety screws included
- Mounting accessories included (suspension kit, theft protection kit)

FURTHER PRODUCT DETAILS

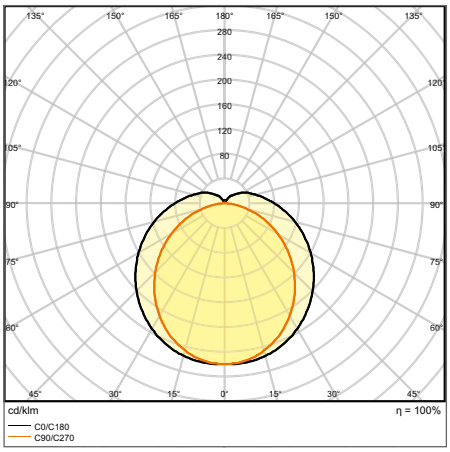

DP SLIM VALUE 1500 50 W 4000 K IP65 GY

The pictures shown in the catalog are for illustration purposes only. For information on size and color, please refer to the product table.

DAMP PROOF SLIM VALUE

Damp-proof luminaire with slim housing

VALUE CLASS

D | CRI >80 | IP65 | IK08 | LEDVANCE 3 year guarantee [1]

Product name	EAN (GTIN)	El.nr.	Replacement for	W	lm	lm/W	K	L80 [2]	°	L × W × H [mm] Ø × H [mm]
DP SLIM VALUE 1200 36 W 4000 K IP65 GY	4058075**066458**	—	2 × 36 W FL	36	4000	110	4000	27000	120	1200 × 35 × 48
DP SLIM VALUE 1200 36 W 6500 K IP65 GY	4058075**066472**	—	2 × 36 W FL	36	4000	110	6500	27000	120	1200 × 35 × 48
DP SLIM VALUE 1500 50 W 4000 K IP65 GY	4058075**066496**	—	2 × 58 W FL	50	5500	110	4000	27000	120	1500 × 35 × 48
DP SLIM VALUE 1500 50 W 6500 K IP65 GY	4058075**066519**	—	2 × 58 W FL	50	5500	110	6500	27000	120	1500 × 35 × 48

[1] Refer to www.ledvance.com/guarantee for precise conditions
[2] t[h]: L70/B50 @ 25 °C (T_a)/t[h]: L80/B10 @ 25 °C (T_a)

DAMP PROOF VALUE

Damp-proof luminaires, classic shape

PRODUCT FEATURES

- High luminous efficacy: up to 120 lm/W
- Type of protection: IP65
- Beam angle: 115°
- Through-wiring possible
- Polycarbonate housing

PRODUCT BENEFITS

- Evenly distributed light
- Energy savings of up to 50 % (compared to luminaires that use fluorescent lamps)
- Easy installation, no tools required for connection
- 3 years guarantee

AREAS OF APPLICATION

- Industrial and storage facilities
- Car parks and underpasses
- Garages
- Workshops, assembly lines

EQUIPMENT / ACCESSORIES

- Stainless steel clamps with safety screws included
- Mounting accessories included (suspension kit, theft protection kit)

FURTHER PRODUCT DETAILS

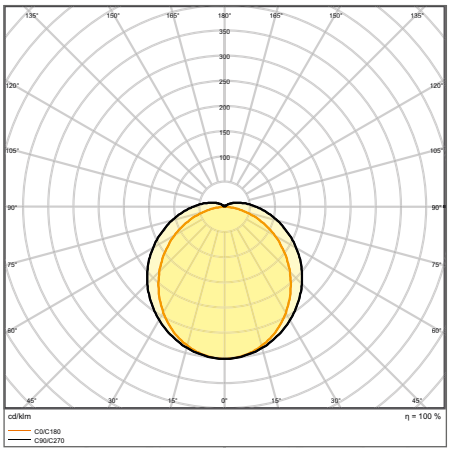

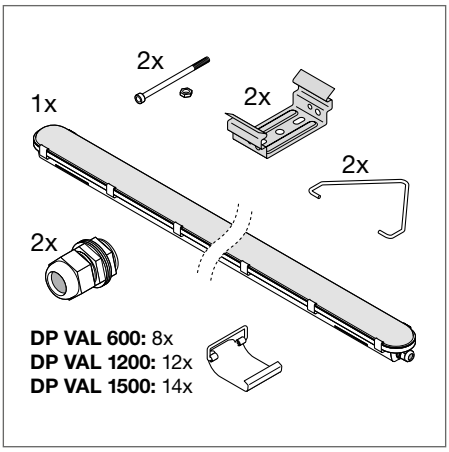

DP VAL 1800 70 W 4000 K IP65

The pictures shown in the catalog are for illustration purposes only. For information on size and color, please refer to the product table.

DAMP PROOF VALUE

Damp-proof luminaires, classic shape

VALUE CLASS

CRI >80 | IP65 | IK08 | LEDVANCE 3 year guarantee [1]

Product name	EAN (GTIN)	El.nr.	Replacement for	W	lm	lm/W	K	L70 [2]	°	L × W × H [mm] Ø × H [mm]
DP VAL 600 9 W 4000 K IP65	4058075**300705**	—	1 × 18 W FL	9	1080	120	4000	50000	115	600 × 77 × 66
DP VAL 600 18 W 4000 K IP65	4058075**300743**	—	2 × 18 W FL	18	2160	120	4000	50000	115	600 × 77 × 66
DP VAL 1200 20 W 4000 K IP65	4058075**300781**	—	1 × 36 W FL	20	2400	120	4000	50000	115	1200 × 77 × 66
DP VAL 1200 40 W 4000 K IP65	4058075**300828**	—	2 × 36 W FL	40	4800	120	4000	50000	115	1200 × 77 × 66
DP VAL 1500 25 W 4000 K IP65	4058075**300866**	—	1 × 58 W FL	25	3000	120	4000	50000	115	1500 × 77 × 66
DP VAL 1500 50 W 4000 K IP65	4058075**300903**	—	2 × 58 W FL	50	6000	120	4000	50000	115	1500 × 77 × 66
DP VAL 1800 34 W 4000 K IP65	4058075**300941**	—	1 × 70 W FL	34	3700	110	4000	30000	115	1800 × 96 × 83
DP VAL 1800 70 W 4000 K IP65	4058075**300989**	—	2 × 70 W FL	70	7500	105	4000	30000	115	1800 × 96 × 83

[1] Refer to www.ledvance.com/guarantee for precise conditions
[2] t[h]: L70/B50 @ 25 °C (T_a)/t[h]: L80/B10 @ 25 °C (T_a)

HIGH-BAY LUMINAIRES

HIGH EFFICIENCY AND OPTIMUM QUALITY OF LIGHT

HIGH BAY GEN 4

PERFOR-MANCE CLASS

Page 176

NEW HIGH BAY GENERATION WITH HIGH LUMINOUS EFFICACY
- Suitable for industrial use due to broad temperature range and long lifetime
- Energy savings of up to 64 % compared to conventional high-bay luminaires
- Suitable for use in dusty and damp locations thanks to high IP rating

HIGH BAY GEN 4 SENSOR

PERFOR-MANCE CLASS

Page 177

HIGHLY INTELLIGENT AND EFFICIENT
- Multiple adjustments of sensor with corridor functionality
- Energy savings of up to 64 % compared to conventional high-bay luminaires
- Suitable for use in dusty and damp locations thanks to high IP rating

HIGH BAY GEN 3 DALI

PERFOR-MANCE CLASS

Page 178

FOR HIGH LIGHTING DEMANDS
- LED high-bay luminaires with DALI-2 interface
- Different versions for ceiling heights from 6 m to 14 m
- Low-flicker light thanks to special electronic control gear

HIGH BAY ACCESSORIES

Page 180

HIGH BAY REFLECTOR
HIGH BAY REFRACTOR
HIGH BAY BRACKET
HIGH BAY REMOTE CONTROL

HIGHLY INTELLIGENT AND EFFICIENT
- High-quality aluminum reflector or polycarbonate refractor for optimization of UGR and beam shaping
- Sturdy steel bracket, with huge adjustment range of +/- 90°
- Remote control for configuration sensor

HIGH BAY COMPACT

VALUE CLASS

Page 182

GOOD LIGHTING FOR EVERYDAY APPLICATIONS
- Modern slim design with optimized weight and size
- Energy savings of up to 60 % compared to conventional high bay luminaires

HIGH BAY COMPACT ACCESSORIES

Page 184

HIGH BAY COMPACT REFLECTOR
HIGH BAY COMPACT BRACKET

ACCESSORIES FOR OPTIMUM QUALITY OF LIGHT
- High-quality aluminum reflector for beam shaping and glare reduction
- Sturdy steel bracket, with huge adjustment range of +/- 60°

HIGH BAY GEN 4 SENSOR EFFICIENT LIGHT FOR HIGH CEILINGS

The new sensor version of HIGH BAY GEN 4 enables you to implement intelligent lighting even in warehouses, industrial facilities and logistics centers with ceiling heights of up to approximately 12 meters with minimal effort. Quick and convenient: configuration via remote control.

SIMPLE BASIC CONFIGURATION DIRECTLY ON THE SENSOR

SWITCH 1: DETECTION AREA

In this area the RF sensor detects movement.

SWITCHES 2 AND 3: HOLD TIME

During this time, the light is still switched on 100 % after moving objects have left the detection area.

SWITCH 4: DAYLIGHT THRESHOLD

Here you can define the sensor's dependence on daylight. When the daylight function is activated the motion sensor does not react until the ambient brightness is below 100 lux. When it is deactivated the sensor always reacts to movement.

SWITCHES 5 AND 6: DIMMING LEVEL

The luminaire dims to this defined brightness value during standby after the set hold time has elapsed.

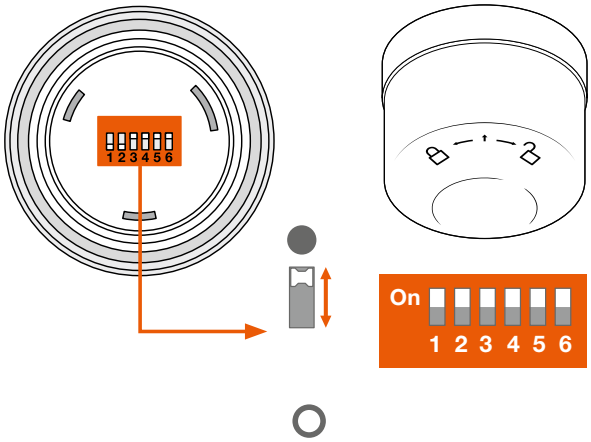

DETECTION AREA

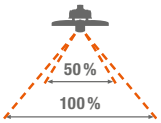

1	
●	100 %
○	5 %

HOLD TIME

2	3	
●	●	30 s
●	○	1 min
○	●	5 min
○	○	10 min

DAYLIGHT SENSOR

4	
●	Disable
○	100 lux

DIMMING LEVEL

5	6	
●	●	Off
○	●	10 %
●	○	30 %

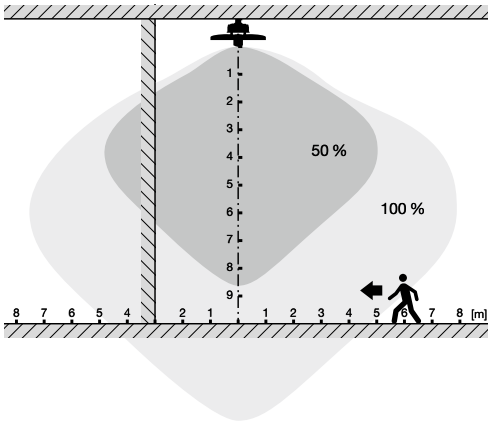

ECONOMICAL THANKS TO INTELLIGENT CORRIDOR FUNCTION

Wherever 24-hour lighting is required the corridor function helps to efficiently provide the necessary light.

The lighting can be activated depending on presence and, if required, on daylight to suit individual requirements. If it does not detect presence it will dim to the set level or switch off completely for a certain time.

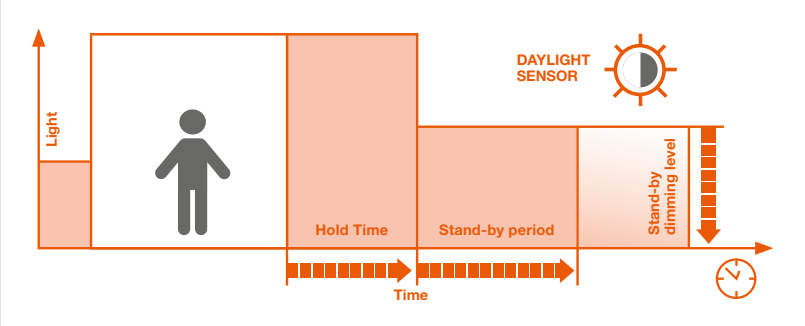

HIGH BAY GEN 4

High bay luminaires up to 150 lm/W and attractive UGR

1

2

2

PRODUCT FEATURES

- High frequency sensor for daylight and motion detection
- Different luminous flux and beam angle for mounting heights of ~6 m to 14 m in 4 000 K or 6 500 K or ~6 m to 10 m in 4 000 K for sensor version

PRODUCT BENEFITS

- High luminous efficacy
- Energy savings of up to 64 % compared to conventional high bay luminaires
- 5 years guarantee
- Suitable for use in dusty and damp locations thanks to high IP rating
- Multiple adjustments of sensor range, daylight detection and hold time on sensor version

AREAS OF APPLICATION

- Replacement for high bay luminaires with mercury vapor or metal halide lamps
- Warehouses
- Logistics halls
- Industry
- High ceiling (e.g. in shopping malls, airports, commercial buildings, lobbies)

EQUIPMENT / ACCESSORIES

- Mounting brackets, reflectors and refractors available as optional separate accessory. High Bay Sensor versions include bracket
- Mounting hook included

FURTHER PRODUCT DETAILS

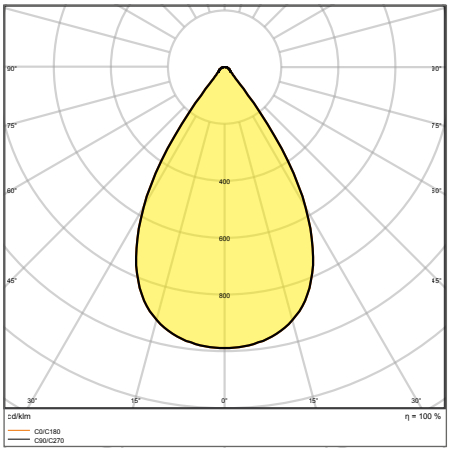

HB P 87W 840 70DEG IP65

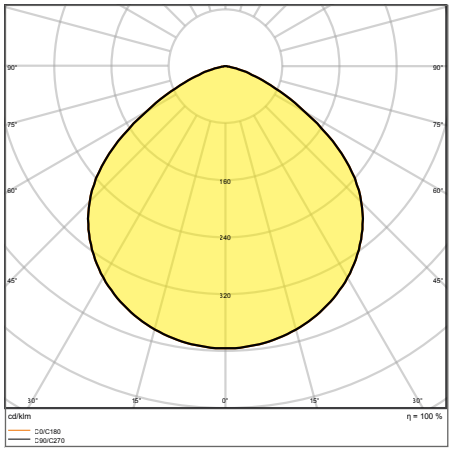

HB P 87W 840 110DEG IP65

The pictures shown in the catalog are for illustration purposes only. For information on size and color, please refer to the product table.

HIGH BAY GEN 4

High bay luminaires up to 150 lm/W and attractive UGR

PERFORMANCE CLASS · FLICKER VALUE <5% · CRI ≥80 · IP65 · IK08 · LEDVANCE 5 year guarantee [1]

Product name	EAN (GTIN)	El.nr.	Replacement for	W	lm	lm/W	K	L80 [2]	∠°	L × W × H [mm] Ø × H [mm]	No.
HB P 87W 840 70DEG IP65	4058075**692787**	**3208500**	250 W HID	87	13000	150	4000	50000	70	280 × 155	1
HB P 87W 840 110DEG IP65	4058075**692718**	**3208501**	250 W HID	87	13000	150	4000	50000	110	280 × 155	1
HB P 87W 865 70DEG IP65	4058075**692855**	—	250 W HID	87	13000	150	6500	50000	70	280 × 155	1
HB P 87W 865 110DEG IP65	4058075**692848**	—	250 W HID	87	13000	150	6500	50000	110	280 × 155	1
HB P 147W 840 70DEG IP65	4058075**692800**	**3208502**	400 W HID	147	22000	150	4000	50000	70	321 × 152	1
HB P 147W 840 110DEG IP65	4058075**692794**	**3208503**	400 W HID	147	22000	150	4000	50000	110	321 × 152	1
HB P 147W 865 70DEG IP65	4058075**764248**	—	400W HID	147	22000	150	6500	50000	70	321 × 152	1
HB P 147W 865 110DEG IP65	4058075**692862**	—	400 W HID	147	22000	150	6500	50000	110	321 × 152	1
HB P 190W 840 70DEG IP65	4058075**692824**	**3208504**	500 W HID	190	27000	140	4000	50000	70	321 × 156	1
HB P 190W 840 110DEG IP65	4058075**692817**	**3208505**	500 W HID	190	27000	140	4000	50000	110	321 × 156	1
HB P 190W 865 70DEG IP65	4058075**692879**	—	500 W HID	190	27000	140	6500	50000	70	321 × 156	1
HB P 190W 865 110DEG IP65	4058075**764255**	—	500W HID	190	27000	140	6500	50000	110	321 × 156	1
HB P 210W 840 70DEG IP65	4058075**692831**	**3208514**	500 W HID	210	30000	140	4000	50000	70	321 × 156	1
HB P 210W 865 70DEG IP65	4058075**692886**	—	500 W HID	210	30000	140	6500	50000	70	321 × 156	1

HIGH BAY SENSOR GEN 4

High bay luminaires in IP65 with high frequency sensor

PERFORMANCE CLASS · CRI ≥80 · IP65 · IK08 · LEDVANCE 5 year guarantee [1]

Product name	EAN (GTIN)	El.nr.	Replacement for	W	lm	lm/W	K	L80 [2]	∠°	L × W × H [mm] Ø × H [mm]	No.
HB SEN P 87W 840 110DEG IP65	4058075**603257**	**3208515**	250 W HID	87	13000	150	4000	50000	110	280 × 190	2
HB SEN P 147W 840 70DEG IP65	4058075**603271**	**3208517**	400 W HID	147	22000	150	4000	50000	70	321 × 188	2
HB SEN P 147W 840 110DEG IP65	4058075**603264**	**3208516**	400 W HID	147	22000	150	4000	50000	110	321 × 188	2
HB SEN P 190W 840 110DEG IP65	4058075**603288**	**3208518**	500 W HID	190	27000	140	4000	50000	110	321 × 192	2

SENSOR PROPERTIES

Product name	Type of sensor	Sensor technology	Detection threshold of daylight sensor	Detection range of motion sensor	Sensor detection angle	Sensor controlled switching time
HB SEN P 87W 840 110DEG IP65	Motion/Light	Microwave	100 lx	6…15 m	< 150°	30 s…10 min
HB SEN P 147W 840 70DEG IP65	Motion/Light	Microwave	100 lx	6…15 m	< 150°	30 s…10 min
HB SEN P 147W 840 110DEG IP65	Motion/Light	Microwave	100 lx	6…15 m	< 150°	30 s…10 min
HB SEN P 190W 840 110DEG IP65	Motion/Light	Microwave	100 lx	6…15 m	< 150°	30 s…10 min

[1] Refer to www.ledvance.com/guarantee for precise conditions
[2] t[h]: L70/B50 @ 25 °C (T_a)/t[h]: L80/B10 @ 25 °C (T_a)

HIGH BAY GEN 3 DALI

LED high-bay luminaires with DALI interface

PRODUCT FEATURES

- Robust aluminum housing with 1.5 m connection cable 3 × 1.5 mm², high-quality PC cover
- Ambient temperature in operation: –30…+50 °C
- High luminous efficacy: up to 140 lm/W
- Includes mounting hook for suspended installation. Surface-mounting possible via separate bracket.
- Type of protection: IP65

PRODUCT BENEFITS

- High luminous efficacy
- Usable from 6 m to 14 m ceiling height
- Low flicker light thanks to special electronic control gear
- D-marking for mounting on surfaces with limited surface temperature
- 5 years guarantee

AREAS OF APPLICATION

- Replacement for high bay luminaires with mercury vapor or metal halide lamps
- Warehouses
- Logistics halls
- Industry
- High ceiling (e.g. in shopping malls, airports, commercial buildings, lobbies)

EQUIPMENT / ACCESSORIES

- Mounting hook included
- Mounting brackets, reflectors and refractors available as optional separate accessory*

FURTHER PRODUCT DETAILS

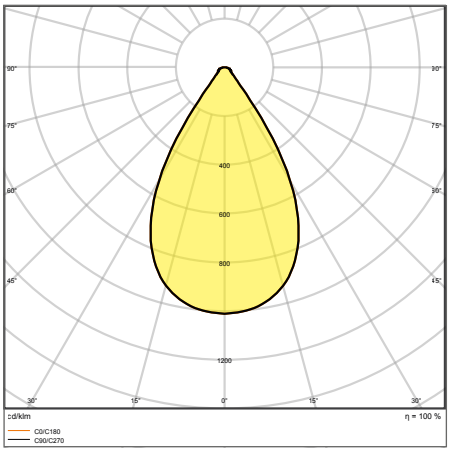

HB DALI 190 W-4000 K 70DEG IP65

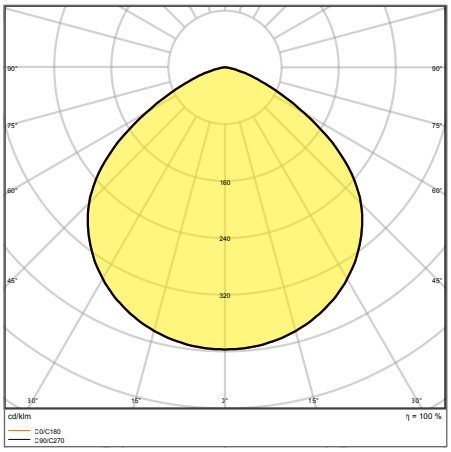

HB DALI 190 W-4000 K 110DEG IP65

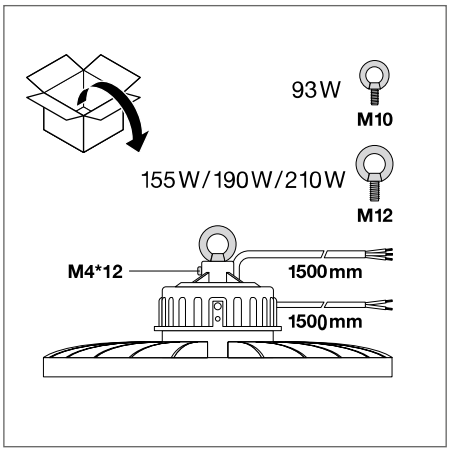

DALI versions

*All DALI versions include mounting brackets.
The pictures shown in the catalog are for illustration purposes only. For information on size and color, please refer to the product table.

HIGH BAY GEN 3 DALI

LED high-bay luminaires with DALI interface

PERFORMANCE CLASS | VIVA RES | EN | TÜV SÜD | D | FLICKER VALUE <5% | CRI ≥80 | IP65 | IK08 | LEDVANCE 5 year guarantee [1]

Product name	EAN (GTIN)	El.nr.	W	lm	lm/W	K	L80 [2]	°		DALI-2	L × W × H [mm] Ø × H [mm]
HB DALI 93 W-4000 K 70DEG IP65	4058075**543911**	—	93	13000	140	4000	50000	70		DALI-2	280 × 160
HB DALI 93 W-4000 K 110DEG IP65	4058075**543904**	**3202870**	93	13000	141	4000	50000	110		DALI-2	280 × 160
HB DALI 155 W-4000 K 70DEG IP65	4058075**543935**	—	155	22000	142	4000	50000	70		DALI-2	321 × 163
HB DALI 155 W-4000 K 110DEG IP65	4058075**543928**	**3202871**	155	22000	143	4000	50000	110		DALI-2	321 × 163
HB DALI 190 W-4000 K 70DEG IP65	4058075**543959**	—	190	27000	144	4000	50000	70		DALI-2	321 × 168
HB DALI 190 W-4000 K 110DEG IP65	4058075**543942**	**3202872**	190	27000	145	4000	50000	110		DALI-2	321 × 168
HB DALI 210 W-4000 K 70DEG IP65	4058075**543966**	**3202873**	210	30000	146	4000	50000	70		DALI-2	321 × 168

[1] Refer to www.ledvance.com/guarantee for precise conditions
[2] t[h]: L70/B50 @ 25 °C (T_a)/t[h]: L80/B10 @ 25 °C (T_a)

HIGH BAY ACCESSORIES

Reflectors, refractors and mounting accessories for HIGH BAY luminaires

1

2

3

4

- High quality aluminum reflector
- High quality polycarbonate refractor
- Brackets made of black steel with adjustable swivel angle: ±90°*
- Remote control for advanced sensor settings

Product name	EAN (GTIN)	El.nr.	L × W × H [mm] Ø × H [mm]	MATERIAL	COLOR		No.
HB ALU REFLECTOR 87W	4058075**699397**	**3004882**	415 × 205	Aluminum	Silver	1	1
HB ALU REFLECTOR 93 W	4058075**507043**	—	415 × 208	Aluminum	Silver	2	—
HB ALU REFLECTOR 155 W - 210 W	4058075**507050**	—	499 × 81	Aluminum	Silver	2	—
HB ALU REFLECTOR 147 190 210W	4058075**699410**	**3004883**	500 × 235	AluminumSilver	Silver	1	1
HB PC REFRACTOR 87W	4058075**699359**	**3004884**	413 × 205	Polycarbonate (PC)	Transparent	1	2
HB PC REFRACTOR 93 W	4058075**507029**	—	309 × 76	Polycarbonate (PC)	—	2	—
HB PC REFRACTOR 147 190 210W	4058075**699373**	**3004885**	480 × 250	Polycarbonate (PC)	Transparent	1	2
HB PC REFRACTOR 155 W - 210 W	4058075**507036**	—	414 × 138	Polycarbonate (PC)	—	2	—
HB BRACKET 87 147 190 210W	4058075**695191**	**1311987**	138 × 35 × 150	Steel	Black	1	3
HB BRACKET 190 W - 210 W	4058075**505308**	—	— × 150	Steel	Black	1	3
HB SENSOR REMOTE CONTROL 93W - 190W	4058075**611436**	**3004886**	117 × 56 × 15	Polycarbonate (PC)	—	1	4

*Bracket only for standard types. Sensor types already include bracket.
The pictures shown in the catalog are for illustration purposes only. For information on size and color, please refer to the product table.

COMPATIBILITY OF HIGH BAY ACCESSORIES

Product name	EAN (GTIN)	El.nr.	HB Gen 4 Compatibility*
HB ALU REFLECTOR 87W	4058075**699397**	**3004882**	✓
HB ALU REFLECTOR 93W	4058075**507043**	—	Fits to 87W
HB ALU REFLECTOR 155W-210W	4058075**507050**	—	Fits to 147W, 190W, 210W
HB ALU REFLECTOR 147 190 210W	4058075**699410**	**3004883**	✓
HB PC REFRACTOR 87W	4058075**699359**	**3004884**	✓
HB PC REFRACTOR 93W	4058075**507029**	—	Fits to 87W
HB PC REFRACTOR 147 190 210W	4058075**699373**	**3004885**	✓
HB PC REFRACTOR 155W-210W	4058075**507036**	—	Fits to 147W, 190W, 210W
HB BRACKET 87 147 190 210W	4058075**695191**	**1311987**	✓
HB BRACKET 190W-210W	4058075**505308**	—	Fits to all wattages

* Not for High Bay Sensor & DALI types. Brackets are already included with each of these types.

HIGH BAY COMPACT

High bay luminaires up to 120 lm/W

PRODUCT FEATURES

- Operating temperature: –20…45 °C
- Black aluminum housing, tempered glass cover
- Opal cover
- Type of protection: IP65
- Lifetime (L70): up to 50 000 h
- High luminous efficacy: up to 120 lm/W

PRODUCT BENEFITS

- Modern exclusive design
- Energy savings of up to 60 % compared to conventional high bay luminaires
- 3 years guarantee
- Optimized weight and size due to compact design

AREAS OF APPLICATION

- Replacement for high bay luminaires with mercury vapor or metal halide lamps
- Warehouses
- Logistics halls
- Industry
- High ceiling (e.g. in shopping malls, airports, commercial buildings, lobbies)

EQUIPMENT / ACCESSORIES

- Accessories for several mounting options available as an optional accessory

FURTHER PRODUCT DETAILS

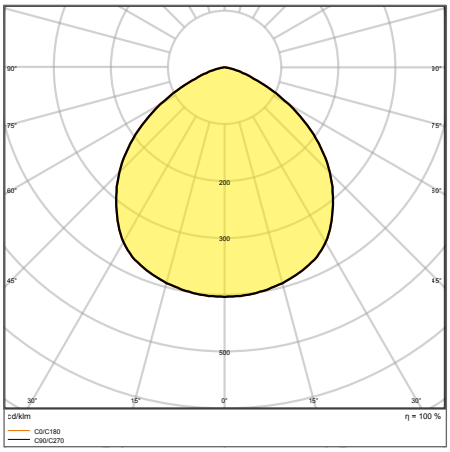

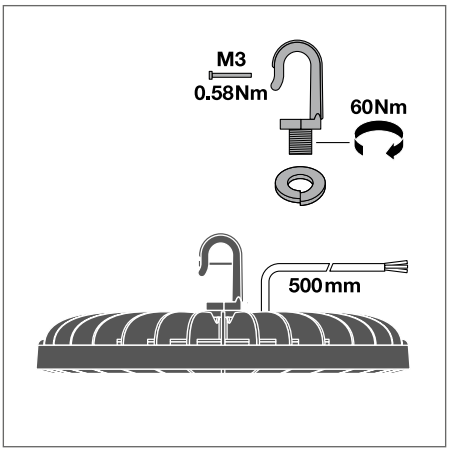

HB COMP V 83W 840 110DEG IP65

The pictures shown in the catalog are for illustration purposes only. For information on size and color, please refer to the product table.

HIGH BAY COMPACT

High bay luminaires up to 120 lm/W

VALUE CLASS

D | FLICKER VALUE <20 % | CRI >80 | IP65 | IK06 | LEDVANCE 3 year guarantee [1]

Product name	EAN (GTIN)	El.nr.	Replacement for	W	lm	lm/W	K	L80 [2]	°	L × W × H [mm] Ø × H [mm]
HB COMP V 83W 840 110DEG IP65 VS1	4058075**708174**	**3208520**	250 W HID	83	10000	120	4000	45000	110	180 × 50
HB COMP V 83W 865 110DEG IP65 VS1	4058075**708211**	—	250 W HID	83	10000	120	6500	45000	110	180 × 50
HB COMP V 133W 840 110DEG IP65 VS1	4058075**708181**	**3208521**	400 W HID	133	16000	120	4000	45000	110	220 × 50
HB COMP V 133W 865 110DEG IP65	4058075**764453**	—	400 W HID	133	16000	120	6500	45000	110	220 × 50
HB COMP V 166W 840 110DEG IP65 VS1	4058075**708198**	**3208522**	500 W HID	166	20000	120	4000	45000	110	260 × 50
HB COMP V 166W 865 110DEG IP65 VS1	4058075**708228**	—	500 W HID	166	20000	120	6500	45000	110	260 × 50
HB COMP V 225W 840 110DEG IP65 VS1	4058075**708204**	**3208523**	500 W HID	225	27000	120	4000	45000	110	300 × 50
HB COMP V 225W 865 110DEG IP65	4058075**775138**	—	500 W HID	225	27000	120	6500	45000	110	300 × 50

[1] Refer to www.ledvance.com/guarantee for precise conditions
[2] t[h]: L70 / B50 @ 25 °C (T_a) / t[h]: L80 / B10 @ 25 °C (T_a)

HIGH BAY COMPACT ACCESSORIES

Reflectors and mounting accessories for HIGH BAY COMPACT luminaires

1

2

- Reflector Beam angle: 80°
- High-quality aluminum reflector
- Brackets made of black steel
- Bracket's adjustable swivel angle: ±60°

LEDVANCE 2 year guarantee [1]

Product name	EAN (GTIN)	El.nr.	L × W × H [mm] Ø × H [mm]	MATERIAL	COLOR	∠°		No.
HB COMP V REFL 83W 80DEG SI	4058075**715233**	**3004890**	274 × 70	Aluminum	Silver	80	2	1
HB COMP V REFL 133W 80DEG SI	4058075**715240**	**3004891**	320 × 80	Aluminum	Silver	80	2	1
HB COMP V REFL 166W 80DEG SI	4058075**715257**	**3004892**	363 × 112	Aluminum	Silver	80	2	1
HB COMP V REFL 225W 80DEG SI	4058075**715264**	**3004893**	475 × 140	Aluminum	Silver	80	2	1
HB COMP V BRACKET 83W	4058075**715271**	**1311989**	116 × 22 × 78	Steel	Black	—	1	2
HB COMP V BRACKET 133W	4058075**715295**	**1311990**	152 × 22 × 108	Steel	Black	—	1	2
HB COMP V BRACKET 166W	4058075**715318**	**1311991**	190 × 35 × 123	Steel	Black	—	1	2
HB COMP V BRACKET 225W	4058075**715332**	**1311992**	233 × 35 × 138	Steel	Black	—	1	2

[1] Refer to www.ledvance.com/guarantee for precise conditions
The pictures shown in the catalog are for illustration purposes only. For information on size and color, please refer to the product table.

Meeuwsen
Van den Pol

LOW-BAY LUMINAIRES

A MULTI-TALENTED SOLUTION FOR CEILINGS UP TO 14 METERS HIGH

LOW BAY FLEX

Page 188

PERFOR-
MANCE
CLASS

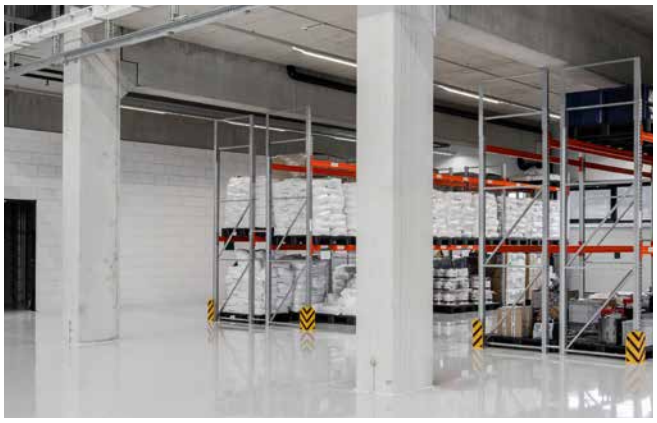

LUMINAIRE DESIGNED FOR VARIOUS APPLICATIONS

- Economical thanks to high luminous efficacy up to 160 lm/W
- Easy and quick installation thanks to toolless connector box with 5- and 7-pole terminals

LOW BAY FLEX: A MULTI-TALENTED SOLUTION FOR CEILINGS UP TO 14 METERS HIGH

The LOW BAY FLEX luminaires are designed for various applications such as warehouses and logistics centers with ceiling heights between 4 and 14 meters. Using the new BALL PROOF COVER accessory, the LOW BAY FLEX can be easily transformed for use in applications that require certified ball-proof protection such as indoor sporting facilities. This easy-to-install solution offers high efficiency of up to 160 lm/W and a life of up to 100 000 hours[1]. It covers many different applications thanks to various mounting options and 4 beam angles. Tool-free open/close end caps, pre-mounted clamps for strain relief and complete through-wiring make installation effortless for larger installations.

CONVENIENT AND TIME-SAVING: WIRING

The end caps can be opened and the electrical wiring can be connected without any tools. And the pre-mounted clamp for strain relief makes installation even easier.

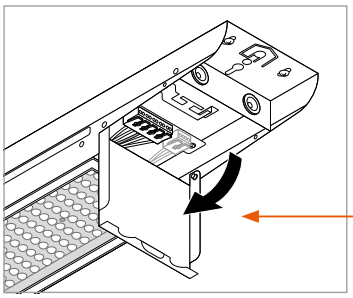

Tool-free open/close end caps giving access to electrical connectors

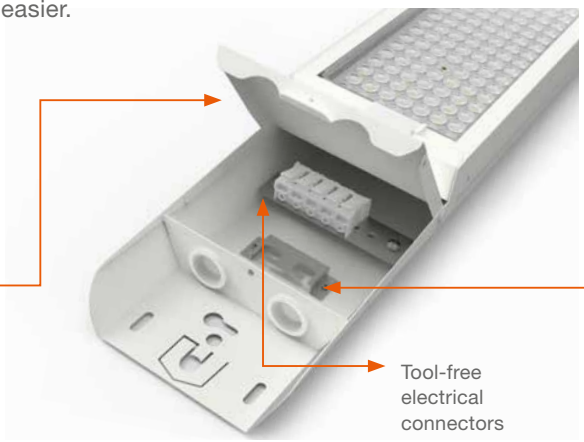

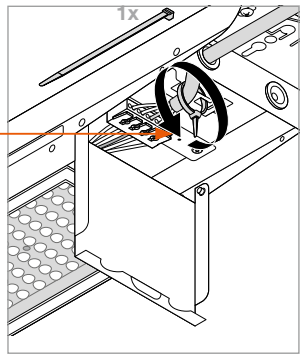

Pre-mounted clamp for power cable strain relief via simple cable clip (not included)

COMPLETE THROUGH-WIRING POSSIBLE

LOW BAY FLEX luminaires are well equipped for complete through-wiring – in both ON/OFF and DALI operation.

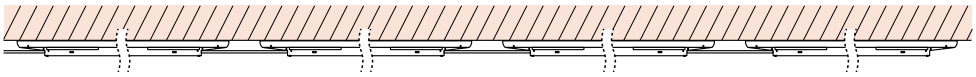

1 × LOW BAY FLEX / LOW BAY FLEX DALI

2 × LOW BAY FLEX / LOW BAY FLEX DALI

3 × LOW BAY FLEX / LOW BAY FLEX DALI

n × LOW BAY FLEX / LOW BAY FLEX DALI

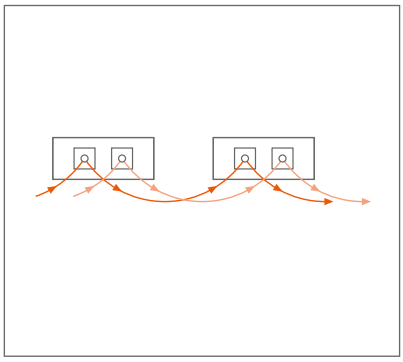

	B16	C10	C16
LOWBAY FLEX 1200 P 42W	18	19	30
LOWBAY FLEX 1200 P 73W	13	13	22
LOWBAY FLEX 1200 DALI P 42W	16	10	16
LOWBAY FLEX 1200 DALI P 73W	27	23	36
LOWBAY FLEX 1500 P 73W	13	13	22
LOWBAY FLEX 1500 P 105W	10	11	18
LOWBAY FLEX 1500 P 140W	9	9	15
LOWBAY FLEX 1500 DALI P 73W	27	23	36
LOWBAY FLEX 1500 DALI P 105W	27	17	28
LOWBAY FLEX 1500 DALI P 140W	16	10	16

[1] t [h]: L70/B50 @ 25 °C (T_a)

LOW BAY FLEX

Low-bay luminaires with attractive linear design, up to 160 lm/W

PRODUCT FEATURES

- Different luminous flux and beam angle for mounting heights of ~4 m to ~10 m in 4 000 K
- Through-wiring cable already installed
- Long lifetime (L80/B10): up to 100 000 h
- High color consistency: ≤ 3 SDCM

PRODUCT BENEFITS

- Economical thanks to high luminous efficacy up to 160 lm/W
- Easy and quick installation thanks to toolless connector box with 5- and 7-pole terminals
- Modern and robust design
- 5 years guarantee

AREAS OF APPLICATION

- Replacement for luminaires with mercury vapor or metal halide lamps
- Warehouses
- Logistics halls
- Industrial and storage facilities
- Discounters, supermarkets

EQUIPMENT / ACCESSORIES

- Suspension kit available as optional separate accessory.

FURTHER PRODUCT DETAILS

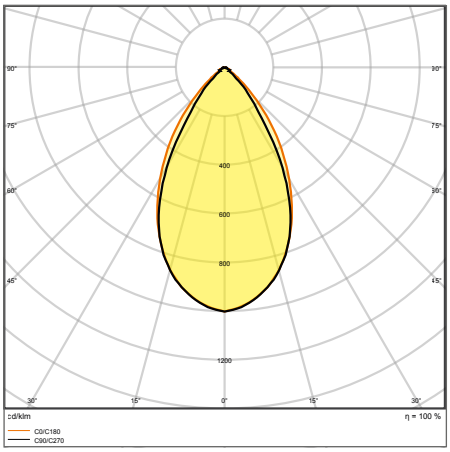

LB FLEX 1500 P 105W 840 N

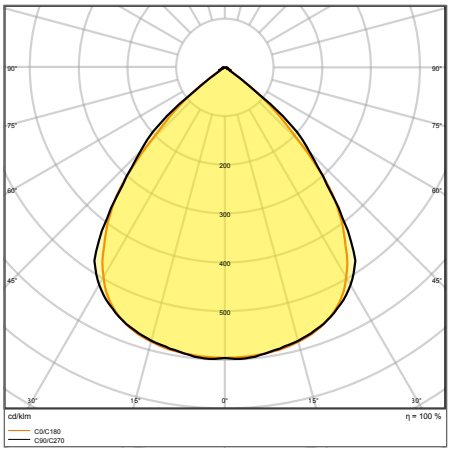

LB FLEX 1500 P 105W 840 W

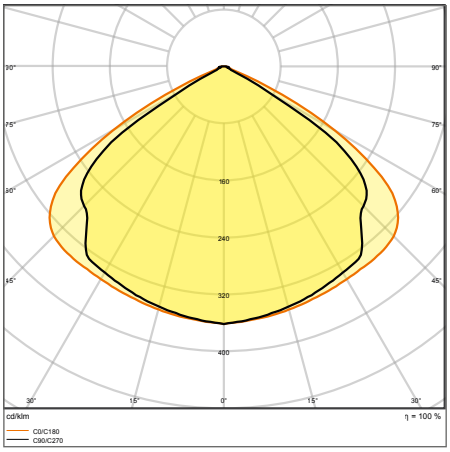

LB FLEX 1500 P 105W 840 VW

The pictures shown in the catalog are for illustration purposes only. For information on size and color, please refer to the product table.

LOW BAY FLEX

Low-bay luminaires with attractive linear design, up to 160 lm/W

PERFOR-MANCE CLASS | FLICKER VALUE <10% | CRI ≥80 | IP23 | IK08 | LEDVANCE 5 year guarantee[1]

	Product naw	EAN (GTIN)	El.nr.	Replacement for	W	lm	lm/W	K	L80[2]		L × W × H [mm] Ø × H [mm]
NEW	LB FLEX 1200 P 42W 840 N	4099854**163654**	**3361429**	2 × 54 W FL T5	42	6510	155	4000	100000	60	1236 × 115 × 65
	LB FLEX 1200 P 42W 840 W	4058075**676060**	**3311404**	2 × 58 W FL	42	6510	155	4000	100000	90	1236 × 115 × 65
	LB FLEX 1200 P 42W 840 VW	4058075**676084**	**3311405**	2 × 58 W FL	42	6510	155	4000	100000	120	1236 × 115 × 65
NEW	LB FLEX 1200 P 42W 840 OV	4099854**163838**	**3361430**	2 × 54 W FL T5	42	6510	155	4000	100000	40 × 90	1236 × 115 × 65
NEW	LB FLEX 1200 P 73W 840 N	4099854**163876**	**3361431**	3 × 54 W FL T5	73	11315	155	4000	100000	60	1236 × 115 × 65
	LB FLEX 1200 P 73W 840 W	4058075**676107**	**3311406**	4 × 58 W FL	73	11315	155	4000	100000	90	1236 × 115 × 65
	LB FLEX 1200 P 73W 840 VW	4058075**676121**	**3311407**	4 × 58 W FL	73	11315	155	4000	100000	120	1236 × 115 × 65
NEW	LB FLEX 1200 P 73W 840 OV	4099854**164118**	**3361432**	3 × 54 W FL T5	73	11315	155	4000	100000	40 × 90	1236 × 115 × 65
NEW	LB FLEX 1500 P 73W 840 N	4099854**164248**	**3361437**	2 × 80 W FL T5	73	11680	160	4000	100000	60	1527 × 115 × 65
NEW	LB FLEX 1500 P 73W 840 W	4099854**164262**	**3361438**	2 × 80 W FL T5	73	11680	160	4000	100000	90	1527 × 115 × 65
NEW	LB FLEX 1500 P 73W 840 VW	4099854**164286**	**3361439**	2 × 80 W FL T5	73	11680	160	4000	100000	120	1527 × 115 × 65
NEW	LB FLEX 1500 P 73W 840 OV	4099854**164309**	**3361440**	2 × 80 W FL T5	73	11680	160	4000	100000	40 × 90	1527 × 115 × 65
	LB FLEX 1500 P 105W 840 N	4058075**676244**	**3311412**	4 × 80 W FL	105	16800	160	4000	100000	60	1527 × 115 × 65
	LB FLEX 1500 P 105W 840 W	4058075**676268**	**3311413**	4 × 80 W FL	105	16800	160	4000	100000	90	1527 × 115 × 65
	LB FLEX 1500 P 105W 840 VW	4058075**676282**	**3311414**	4 × 80 W FL	105	16800	160	4000	100000	120	1527 × 115 × 65
NEW	LB FLEX 1500 P 105W 840 OV	4099854**163616**	**3361441**	3 × 80 W FL T5	105	16800	155	4000	100000	40 × 90	1527 × 115 × 65
NEW	LB FLEX 1500 P 140W 840 N	4099854**163630**	**3361442**	4 × 80 W FL T5	140	22000	155	4000	100000	60	1527 × 115 × 65
NEW	LB FLEX 1500 P 140W 840 W	4099854**163678**	**3361443**	4 × 80 W FL T5	140	22000	155	4000	100000	90	1527 × 115 × 65
NEW	LB FLEX 1500 P 140W 840 VW	4099854**163692**	**3361444**	4 × 80 W FL T5	140	22000	155	4000	100000	120	1527 × 115 × 65
NEW	LB FLEX 1500 P 140W 840 OV	4099854**163715**	**3361445**	4 × 80 W FL T5	140	22000	155	4000	100000	40 × 90	1527 × 115 × 65

LOW BAY FLEX DALI

Low-bay luminaires with attractive linear design, up to 160 lm/W with DALI-2 technology

PERFOR-MANCE CLASS | VIVA RES | FLICKER VALUE <10% | CRI ≥80 | IP23 | IK08 | LEDVANCE 5 year guarantee[1]

	Product name	EAN (GTIN)	El.nr.	Replacement for	W	lm	lm/W	K	L80[2]			L × W × H [mm] Ø × H [mm]
NEW	LB FLEX 1200 DALI P 42W 840 N	4099854**164132**	**3361433**	2 × 54 W FL T5	42	6510	155	4000	100000	60	DALI2	1236 × 115 × 65
	LB FLEX 1200 DALI P 42W 840 W	4058075**676145**	**3311408**	2 × 58 W FL	42	6510	155	4000	100000	90	DALI2	1236 × 115 × 65
	LB FLEX 1200 DALI P 42W 840 VW	4058075**676169**	**3311409**	2 × 58 W FL	42	6510	155	4000	100000	120	DALI2	1236 × 115 × 65
NEW	LB FLEX 1200 DALI P 42W 840 OV	4099854**164156**	**3361434**	2 × 54 W FL T5	42	6510	155	4000	100000	40 × 90	DALI2	1236 × 115 × 65
NEW	LB FLEX 1200 DALI P 73W 840 N	4099854**164170**	**3361435**	3 × 54 W FL T5	73	11315	155	4000	100000	60	DALI2	1236 × 115 × 65
	LB FLEX 1200 DALI P 73W 840 W	4058075**676206**	**3311410**	4 × 58 W FL	73	11315	155	4000	100000	90	DALI2	1236 × 115 × 65
	LB FLEX 1200 DALI P 73W 840 VW	4058075**676220**	**3311411**	4 × 58 W FL	73	11315	155	4000	100000	120	DALI2	1236 × 115 × 65
NEW	LB FLEX 1200 DALI P 73W 840 OV	4099854**164224**	**3361436**	3 × 54 W FL T5	73	11315	155	4000	100000	40 × 90	DALI2	1236 × 115 × 65
NEW	LB FLEX 1500 DALI P 73W 840 N	4099854**163753**	**3361446**	2 × 80 W FL T5	73	11680	160	4000	100000	60	DALI2	1527 × 115 × 65
NEW	LB FLEX 1500 DALI P 73W 840 W	4099854**163791**	**3361447**	2 × 80 W FL T5	73	11680	160	4000	100000	90	DALI2	1527 × 115 × 65
NEW	LB FLEX 1500 DALI P 73W 840 VW	4099854**163814**	**3361448**	2 × 80 W FL T5	73	11680	160	4000	100000	120	DALI2	1527 × 115 × 65
NEW	LB FLEX 1500 DALI P 73W 840 OV	4099854**163852**	**3361449**	2 × 80 W FL T5	73	11680	160	4000	100000	40 × 90	DALI2	1527 × 115 × 65
	LB FLEX 1500 DALI P 105W 840 N	4058075**676305**	**3311415**	4 × 80 W FL	105	16800	160	4000	100000	60	DALI2	1527 × 115 × 65
	LB FLEX 1500 DALI P 105W 840 W	4058075**676329**	**3311416**	4 × 80 W FL	105	16800	160	4000	100000	90	DALI2	1527 × 115 × 65
	LB FLEX 1500 DALI P 105W 840 VW	4058075**676343**	**3311417**	4 × 80 W FL	105	16800	160	4000	100000	120	DALI2	1527 × 115 × 65
NEW	LB FLEX 1500 DALI P 105W 840 OV	4099854**163975**	**3361450**	3 × 80 W FL T5	105	16800	160	4000	100000	40 × 90	DALI2	1527 × 115 × 65
NEW	LB FLEX 1500 DALI P 140W 840 N	4099854**163999**	**3361451**	4 × 80 W FL T5	140	22000	155	4000	100000	60	DALI2	1527 × 115 × 65
NEW	LB FLEX 1500 DALI P 140W 840 W	4099854**164019**	**3361452**	4 × 80 W FL T5	140	22000	155	4000	100000	90	DALI2	1527 × 115 × 65
NEW	LB FLEX 1500 DALI P 140W 840 VW	4099854**164033**	**3361453**	4 × 80 W FL T5	140	22000	155	4000	100000	120	DALI2	1527 × 115 × 65
NEW	LB FLEX 1500 DALI P 140W 840 OV	4099854**164071**	**3361454**	4 × 80 W FL T5	140	22000	155	4000	100000	40 × 90	DALI2	1527 × 115 × 65

[1] Refer to www.ledvance.com/guarantee for precise conditions | [2] t[h]: L70/B50 @ 25 °C (T_a)/t[h]: L80/B10 @ 25 °C (T_a)

PERFECT FOR INDOOR SPORTING FACILITIES
BALL PROOF COVER AND ANGULATION MOUNTING KIT

BALL PROOF COVER

The new separately available to order BALL PROOF COVER accessory can be easily attached in 4 easy steps to the LOW BAY FLEX luminaires providing them with certified ball-proof protection for use in indoor sporting facilities.

4 EASY MOUNTING STEPS

LOWBAY FLEX 1200/1500 P / LOWBAY FLEX 1200/1500 DALI P
+ LB FLEX 1200/1500 BALL PROOF COVER
1200: EAN 4099854177705
1500: EAN 4099854177729

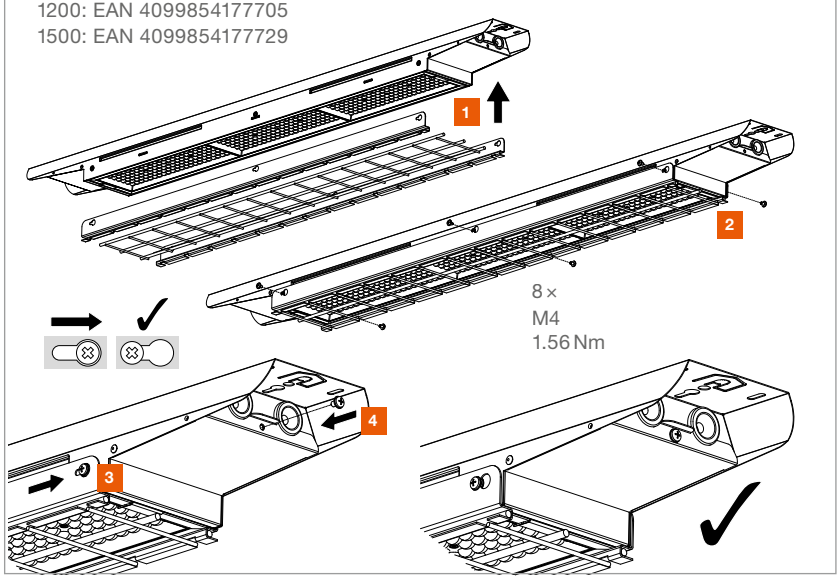

ANGULATION MOUNTING KIT

This kit allows the LOW BAY FLEX luminaire to be mounted in a tilted position, for applications such as the illumination of indoor tennis courts where direct overhead light is not permitted.

Angulation mounting kit shown with LOW BAY FLEX.

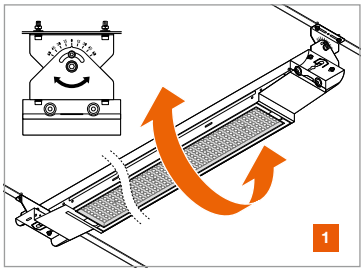

To mount, tilt luminaire to set the desired angle.

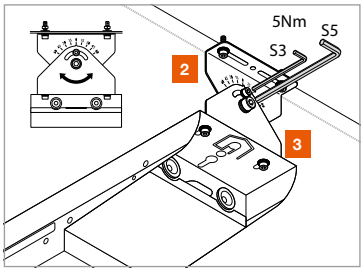

Fix angle on angulation mounting kit using two screws as shown.

LOW BAY FLEX ACCESSORIES

Accessories for LOW BAY FLEX luminaires

1

2

3

Suspension Kit:
- Wire suspension with bracket and 5 m adjustable steel cable
- Easy installation with click-in suspension brackets

Ball Proof Cover:
- Easy installation with 6 included screws
- Ball-proof cover with increased physical robustness (according to DIN 18032-3 and DIN 57710-13)
- Ball-proof certification only valid when luminaire is surface mounted

Angulation Mounting Kit:
- Enables tilting angle adjustment
- Easy installation and simple handling

LEDVANCE 5 year guarantee [1]

	Product name	EAN (GTIN)	El.nr.	L × W × H [mm] Ø × H [mm]	MATERIAL		No.
	LB FLEX SUSPENSION KIT BT1	4058075**693722**	**3304059**	125 × 30 × 46	Steel	1	1
NEW	LB FLEX 1200 BP COVER	4099854**177705**	**3361455**	915 × 119 × 39	Steel	1	2
NEW	LB FLEX 1500 BP COVER	4099854**177729**	**3361456**	1206 × 119 × 39	Steel	1	2
NEW	LB FLEX ANGULATION MOUNTING KIT	4099854**177934**	**3361457**	90 × 42 × 71	Steel	2	3

[1] Refer to www.ledvance.com/guarantee for precise conditions
The pictures shown in the catalog are for illustration purposes only. For information on size and color, please refer to the product table.

FLOODLIGHTS

THE RIGHT ILLUMINATION FOR A WIDE VARIETY OF OUTDOOR AREA AND SPORTS LIGHTING PROJECTS

GENERAL OUTDOOR LIGHTING

FLOODLIGHT: POWERFUL ALL-ROUNDERS

Broad floodlight portfolio for highly efficient and long-lasting illumination across a wide range of applications.

PERFOR-MANCE CLASS

Page 194

FLOODLIGHT SENSOR AND PHOTOCELL SENSOR: INTELLIGENT AND EFFICIENT

Luminaires with programmable, adjustable IP65 daylight and motion sensor. As well as products with highly protected photocell daylight sensor.

PERFOR-MANCE CLASS

Page 198

FLOODLIGHT COMPACT: VERSATILE

Luminaires equipped with all essential features for safe and worry-free outdoor lighting.

VALUE CLASS

Page 202

FLOODLIGHT COMPACT SENSOR: FUNCTIONAL

Luminaires for optimized outdoor lighting by means of motion and daylight sensor.

VALUE CLASS

Page 204

Distribution of light SYM 100

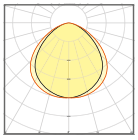

Symmetrical light pattern 100° × 100°
General outdoor and facade lighting

AREA & SPORTS LIGHTING

FLOODLIGHT MAX: HIGHEST LUMEN OUTPUT

Extremely robust, yet very modular high-power floodlight with four beam angles and up to 164 000 lumen light output. Suitable for replacing high-pressure discharge luminaires of up to 2 kW.

PERFOR-MANCE CLASS

Page 206

Distribution of light SYM 10

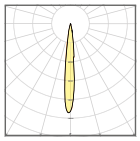

Symmetrical 10°
Illumination of small areas with very high light level requirements

2 500 lx U_0 > 0.7

Distribution of light SYM 30

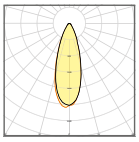

Symmetrical 30°
Illumination of sports grounds and applications that require high illumination levels

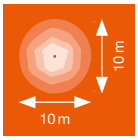

300 lx U_0 > 0.7

Distribution of light SYM 60

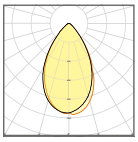

Symmetrical 60°
Illumination of sports areas and applications with high or medium light levels

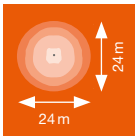

120 lx U_0 > 0.7

Distribution of light ASYM 50 × 110

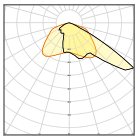

Asymmetrical wide beam 50° × 110°
Illumination of areas, parking lots and sports grounds

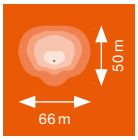

20 lx U_0 > 0.25

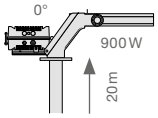

Typical application results with products installed as displayed. Grey dot shows mast position.

FLOODLIGHT PERFORMANCE: POWERFUL AND PRECISE

Highly durable and efficient floodlights, with up to 140 lm/W. Available in four light distributions and light output configurations ranging from 6 300 to 40 800 lumen, ideal for replacing conventional luminaires and new installations alike. Also available with DALI connectivity.

PERFOR-MANCE CLASS

Page 210

Distribution of light ASYM 55 × 110

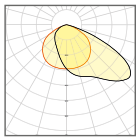

Asymmetrical wide beam 55° × 110°
Illumination of areas, parking lots, sports grounds and facades

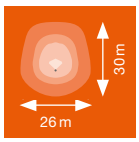

20 lx U_0 > 0.25

Distribution of light ASYM 45 × 140

Asymmetrical extra wide beam 45° × 140°
Illumination of areas, parking lots and (industrial) roads with wide mast spacing

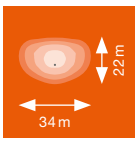

20 lx U_0 > 0.25

Distribution of light SYM R30

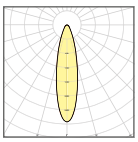

Rotationally symmetrical 30°
Illumination of sports grounds and applications that require high illuminance levels

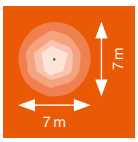

200 lx U_0 > 0.5

Distribution of light SYM 60

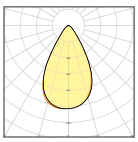

Symmetrical 60°
Illumination of sports areas and applications with high or medium light levels

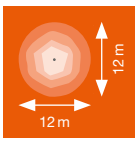

100 lx U_0 > 0.5

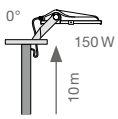

Typical application results with products installed as displayed. Grey dot shows mast position.

FLOODLIGHT AREA: UNIVERSAL LIGHT

Highly efficient and flexible floodlight for universal area lighting.

VALUE CLASS

Page 216

Distribution of light ASYM 48 × 92

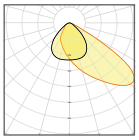

Assymetric beam angle 48° × 92°
Ideal for area and small field sports lighting

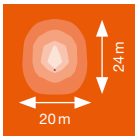

20 lx U_0 > 0.25

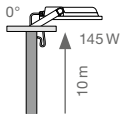

Typical application results with products installed as displayed. Grey dot shows mast position.

FLOODLIGHT 10 W – 50 W

Floodlight with reflector based, symmetric light distribution up to 120 lm/W

PRODUCT FEATURES

- Aluminum housing with toughened glass, black or white
- Symmetrical beam angle: 100° × 100°
- Mounting bracket with 30° angle and wide rotation
- Connection via flexible 1 m cable, wiring required
- Surge protection: up to 4 kV (L/N-PE), 2 kV (L-N)

PRODUCT BENEFITS

- Frosted cover made of tempered glass for uniform illumination
- Energy savings of up to 90 % compared to halogen lamp floodlights
- No upper light output ratio (ULOR 0 %) when mounted at 0° tilt
- Impact resistance: IK07
- 5 years guarantee

AREAS OF APPLICATION

- Replacement for floodlights with halogen lamps
- Outdoor use (IP65)
- Public areas
- Building facades
- Construction areas

FURTHER PRODUCT DETAILS

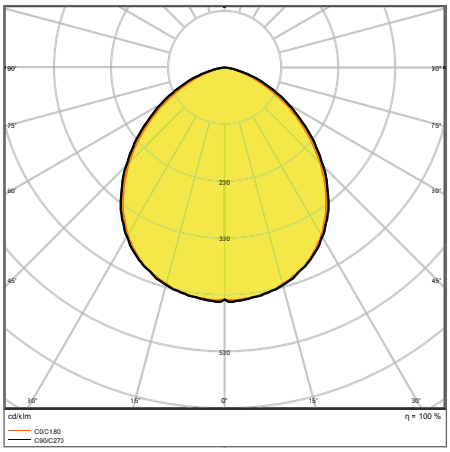

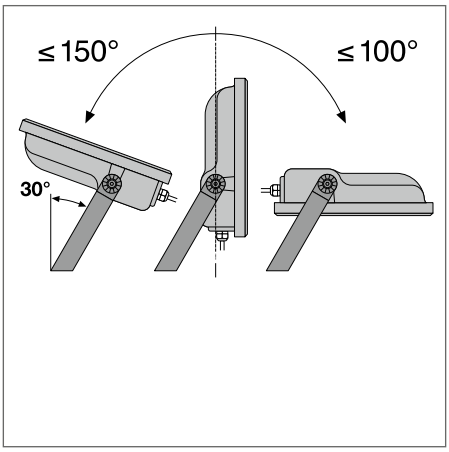

FL PFM 50 W 6500 K SYM 100 WT

The pictures shown in the catalog are for illustration purposes only. For information on size and color, please refer to the product table.

FLOODLIGHT 10 W – 50 W

Floodlight with reflector based, symmetric light distribution up to 120 lm/W

PERFOR-MANCE CLASS

CRI ≥80 | IP65 | IK07 | LEDVANCE 5 year guarantee [1]

Product name	EAN (GTIN)	El.nr.	Replacement for	W	lm	lm/W	K	L80 [2]	∡°	L × W × H [mm] Ø × H [mm]
FL PFM 10 W 3000 K SYM 100 BK	4058075**420847**	**3242408**	80 W HAL	10	1100	110	3000	55000	100 × 100	122 × 131 × 36
FL PFM 10 W 3000 K SYM 100 WT	4058075**420861**	**3242409**	80 W HAL	10	1100	110	3000	55000	100 × 100	122 × 131 × 36
FL PFM 10 W 4000 K SYM 100 BK	4058075**420885**	**3242410**	80 W HAL	10	1200	120	4000	55000	100 × 100	122 × 131 × 36
FL PFM 10 W 4000 K SYM 100 WT	4058075**420908**	**3242411**	80 W HAL	10	1200	120	4000	55000	100 × 100	122 × 131 × 36
FL PFM 10 W 6500 K SYM 100 BK	4058075**420922**	—	80 W HAL	10	1200	120	6500	55000	100 × 100	122 × 131 × 36
FL PFM 10 W 6500 K SYM 100 WT	4058075**420946**	—	80 W HAL	10	1200	120	6500	55000	100 × 100	122 × 131 × 36
FL PFM 20 W 3000 K SYM 100 BK	4058075**420960**	**3242457**	160 W HAL	20	2200	110	3000	55000	100 × 100	144 × 156 × 42
FL PFM 20 W 3000 K SYM 100 WT	4058075**420991**	**3242458**	160 W HAL	20	2200	110	3000	55000	100 × 100	144 × 156 × 42
FL PFM 20 W 4000 K SYM 100 BK	4058075**421011**	**3242459**	160 W HAL	20	2400	120	4000	55000	100 × 100	144 × 156 × 42
FL PFM 20 W 4000 K SYM 100 WT	4058075**421035**	**3242460**	160 W HAL	20	2400	120	4000	55000	100 × 100	144 × 156 × 42
FL PFM 20 W 6500 K SYM 100 BK	4058075**421059**	**3242461**	160 W HAL	20	2400	120	6500	55000	100 × 100	144 × 156 × 42
FL PFM 20 W 6500 K SYM 100 WT	4058075**421073**	—	160 W HAL	20	2400	120	6500	55000	100 × 100	144 × 156 × 42
FL PFM 30 W 3000 K SYM 100 BK	4058075**421097**	**3242462**	250 W HAL	30	3300	110	3000	55000	100 × 100	177 × 186 × 42
FL PFM 30 W 3000 K SYM 100 WT	4058075**421110**	**3242480**	250 W HAL	30	3300	110	3000	55000	100 × 100	177 × 186 × 42
FL PFM 30 W 4000 K SYM 100 BK	4058075**421134**	**3242463**	250 W HAL	30	3600	120	4000	55000	100 × 100	177 × 186 × 42
FL PFM 30 W 4000 K SYM 100 WT	4058075**421165**	**3242481**	250 W HAL	30	3600	120	4000	55000	100 × 100	177 × 186 × 42
FL PFM 30 W 6500 K SYM 100 BK	4058075**421189**	—	250 W HAL	30	3600	120	6500	55000	100 × 100	177 × 186 × 42
FL PFM 30 W 6500 K SYM 100 WT	4058075**421202**	—	250 W HAL	30	3600	120	6500	55000	100 × 100	177 × 186 × 42
FL PFM 50 W 3000 K SYM 100 BK	4058075**421226**	**3242464**	400 W HAL	50	5500	110	3000	55000	100 × 100	206 × 218 × 46
FL PFM 50 W 3000 K SYM 100 WT	4058075**421240**	**3242465**	400 W HAL	50	5500	110	3000	55000	100 × 100	206 × 218 × 46
FL PFM 50 W 4000 K SYM 100 BK	4058075**421264**	**3242466**	400 W HAL	50	6000	120	4000	55000	100 × 100	206 × 218 × 46
FL PFM 50 W 4000 K SYM 100 WT	4058075**421288**	**3242467**	400 W HAL	50	6000	120	4000	55000	100 × 100	206 × 218 × 46
FL PFM 50 W 6500 K SYM 100 BK	4058075**421301**	**3242468**	400 W HAL	50	6000	120	6500	55000	100 × 100	206 × 218 × 46
FL PFM 50 W 6500 K SYM 100 WT	4058075**421325**	**3242469**	400 W HAL	50	6000	120	6500	55000	100 × 100	206 × 218 × 46

[1] Refer to www.ledvance.com/guarantee for precise conditions
[2] t[h]: L70/B50 @ 25 °C (T_a)/t[h]: L80/B10 @ 25 °C (T_a)

FLOODLIGHT 65 W – 200 W

Floodlight with reflector based, symmetric light distribution up to 125 lm/W

PRODUCT FEATURES

- Aluminum housing with toughened glass
- Symmetrical beam angle: 100° × 100°
- Mounting bracket with 30° angle and wide rotation
- Breather membrane to optimize air exchange, without compromising IP protection
- Surge protection: up to 6 kV (L/N-PE), 4 kV (L-N)

PRODUCT BENEFITS

- Frosted cover made of tempered glass for uniform illumination
- Energy savings of up to 90 % compared to halogen lamp floodlights
- No upper light output ratio (ULOR 0 %) when mounted at 0° tilt
- Impact resistance: IK08
- 5 years guarantee

AREAS OF APPLICATION

- Replacement for floodlights with halogen lamps
- Outdoor use (IP65)
- Public areas
- Building facades
- Construction areas

FURTHER PRODUCT DETAILS

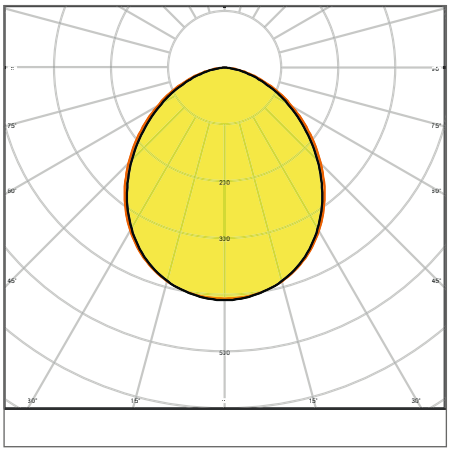

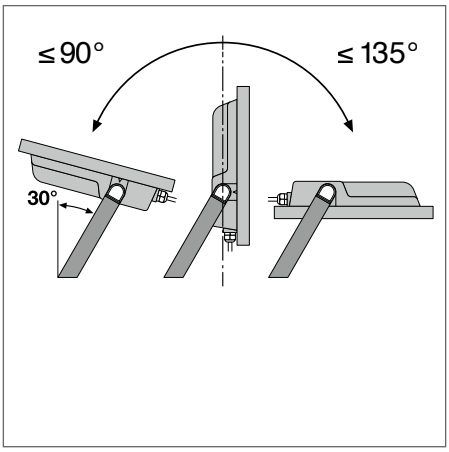

FL PFM 200 W 6500 K SYM 100 BK

The pictures shown in the catalog are for illustration purposes only. For information on size and color, please refer to the product table.

FLOODLIGHT 65 W – 200 W

Floodlight with reflector based, symmetric light distribution up to 125 lm/W

PERFOR-MANCE CLASS

FLICKER VALUE <5% [1] | CRI ≥80 | IP65 | IK08 | LEDVANCE 5 year guarantee [2]

Product name	EAN (GTIN)	El.nr.	Replacement for	W	lm	lm/W	K	L80 [3]	∡°	L × W × H [mm] Ø × H [mm]
FL PFM 65 W 3000 K SYM 100 BK	4058075**422445**	**3242470**	500 W HAL	65	7150	110	3000	55000	100 × 100	268 × 237 × 49
FL PFM 65 W 4000 K SYM 100 BK	4058075**422469**	**3242471**	500 W HAL	65	8000	123	4000	55000	100 × 100	268 × 237 × 49
FL PFM 65 W 6500 K SYM 100 BK	4058075**422483**	—	500 W HAL	65	8000	123	6500	55000	100 × 100	268 × 237 × 49
FL PFM 80 W 3000 K SYM 100 BK	4058075**422506**	**3242472**	750 W HAL	80	8800	110	3000	55000	100 × 100	335 × 250 × 55
FL PFM 80 W 4000 K SYM 100 BK	4058075**422520**	**3242473**	750 W HAL	80	10000	125	4000	55000	100 × 100	335 × 250 × 55
FL PFM 80 W 6500 K SYM 100 BK	4058075**422544**	—	750 W HAL	80	10000	125	6500	55000	100 × 100	335 × 250 × 55
FL PFM 125 W 3000 K SYM 100 BK	4058075**423695**	**3242474**	1000 W HAL	125	13750	110	3000	55000	100 × 100	381 × 290 × 59
FL PFM 125 W 4000 K SYM 100 BK	4058075**423701**	**3242475**	1000 W HAL	125	15000	120	4000	55000	100 × 100	381 × 290 × 59
FL PFM 125 W 6500 K SYM 100 BK	4058075**423718**	—	1000 W HAL	125	15000	120	6500	55000	100 × 100	381 × 290 × 59
FL PFM 165 W 3000 K SYM 100 BK	4058075**423725**	**3242476**	1500 W HAL	165	18150	110	3000	55000	100 × 100	418 × 322 × 60
FL PFM 165 W 4000 K SYM 100 BK	4058075**423732**	**3242477**	1500 W HAL	165	20000	121	4000	55000	100 × 100	418 × 322 × 60
FL PFM 165 W 6500 K SYM 100 BK	4058075**423749**	—	1500 W HAL	165	20000	121	6500	55000	100 × 100	418 × 322 × 60
FL PFM 200 W 3000 K SYM 100 BK	4058075**423756**	**3242478**	2000 W HAL	200	22000	110	3000	55000	100 × 100	454 × 354 × 62
FL PFM 200 W 4000 K SYM 100 BK	4058075**423763**	**3242479**	2000 W HAL	200	25000	125	4000	55000	100 × 100	454 × 354 × 62
FL PFM 200 W 6500 K SYM 100 BK	4058075**423770**	—	2000 W HAL	200	25000	125	6500	55000	100 × 100	454 × 354 × 62

[1] Applies only to 125 W, 165 W and 200 W
[2] Refer to www.ledvance.com/guarantee for precise conditions
[3] t[h]: L70/B50 @ 25 °C (T_a)/t[h]: L80/B10 @ 25 °C (T_a)

FLOODLIGHT SENSOR

Floodlight with flexible motion and daylight sensor

PRODUCT FEATURES

- Aluminum housing with toughened glass, black or white
- Symmetrical beam angle: 100° × 100°
- Mounting bracket with 30° angle and wide rotation
- PIR motion and daylight sensor
- Connection via flexible 1 m cable, wiring required

PRODUCT BENEFITS

- Demand optimized illumination due to flexible and programmable sensor
- Easy configuration of sensor range, daylight and motion detection via rotary switch
- Always-on override, activated via special mains switching pattern
- No upper light output ratio (ULOR 0 %) when mounted at 0° tilt
- 5 years guarantee

AREAS OF APPLICATION

- Replacement for floodlights with halogen lamps
- Outdoor use (IP65)
- Public areas
- Building facades
- Construction areas

FURTHER PRODUCT DETAILS

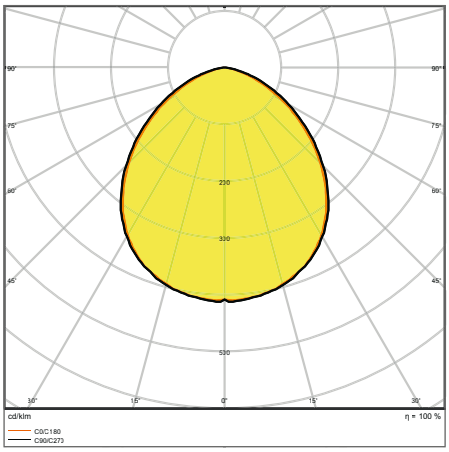

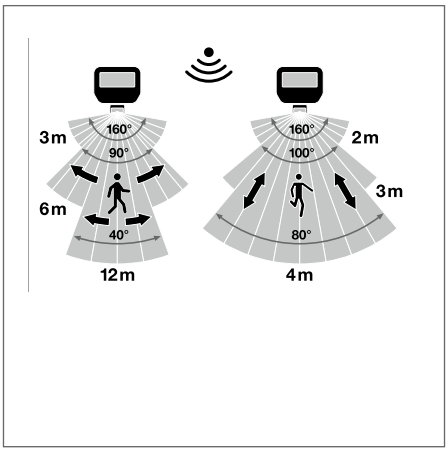

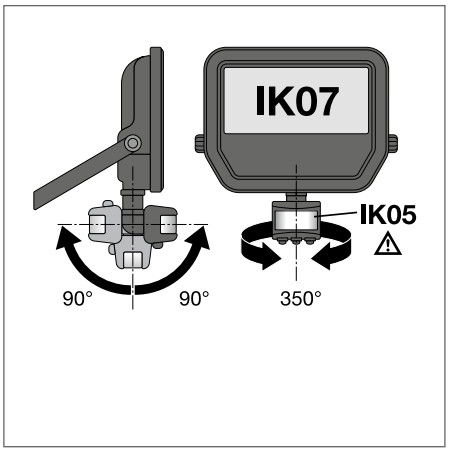

FL PFM 50 W 4000 K SYM 100 S BK

The pictures shown in the catalog are for illustration purposes only. For information on size and color, please refer to the product table.

FLOODLIGHT SENSOR

Floodlight with flexible motion and daylight sensor

PERFOR-MANCE CLASS

CRI ≥80 | IP65 | IK07 | LEDVANCE 5 year guarantee [1]

Product name	EAN (GTIN)	El.nr.	Replacement for	W	lm	lm/W	K	L80 [2]	∡°	L × W × H [mm] Ø × H [mm]
FL PFM 10 W 3000 K SYM 100 S BK	4058075**460836**	**3203843**	80 W HAL	10	1100	110	3000	55000	100 × 100	159 × 131 × 53
FL PFM 10 W 3000 K SYM 100 S WT	4058075**460850**	**3203844**	80 W HAL	10	1100	110	3000	55000	100 × 100	159 × 131 × 53
FL PFM 10 W 4000 K SYM 100 S BK	4058075**460874**	**3203845**	80 W HAL	10	1200	120	4000	55000	100 × 100	159 × 131 × 53
FL PFM 10 W 4000 K SYM 100 S WT	4058075**460898**	**3203926**	80 W HAL	10	1200	120	4000	55000	100 × 100	159 × 131 × 53
FL PFM 20 W 3000 K SYM 100 S BK	4058075**460911**	**3203927**	160 W HAL	20	2200	110	3000	55000	100 × 100	176 × 156 × 55
FL PFM 20 W 3000 K SYM 100 S WT	4058075**460935**	**3203928**	160 W HAL	20	2200	110	3000	55000	100 × 100	176 × 156 × 55
FL PFM 20 W 4000 K SYM 100 S BK	4058075**460959**	**3203929**	160 W HAL	20	2400	120	4000	55000	100 × 100	176 × 156 × 55
FL PFM 20 W 4000 K SYM 100 S WT	4058075**460973**	**3203930**	160 W HAL	20	2400	120	4000	55000	100 × 100	176 × 156 × 55
FL PFM 50 W 3000 K SYM 100 S BK	4058075**460997**	**3203931**	400 W HAL	50	5500	110	3000	55000	100 × 100	225 × 219 × 59
FL PFM 50 W 3000 K SYM 100 S WT	4058075**461017**	**3203932**	400 W HAL	50	5500	110	3000	55000	100 × 100	225 × 219 × 59
FL PFM 50 W 4000 K SYM 100 S BK	4058075**461031**	**3203933**	400 W HAL	50	6000	120	4000	55000	100 × 100	225 × 219 × 59
FL PFM 50 W 4000 K SYM 100 S WT	4058075**461055**	**3203934**	400 W HAL	50	6000	120	4000	55000	100 × 100	225 × 219 × 59

SENSOR PROPERTIES

Product name	Type of sensor	Sensor technology	Detection threshold of daylight sensor	Detection range of motion sensor	Sensor detection angle	Sensor controlled switching time
FLOODLIGHT SENSOR 10 W	Motion/Light	Passive infrared/Photocell	10…2000 lx	2…12 m	40°...160 °	10 s…12 min
FLOODLIGHT SENSOR 20 W	Motion/Light	Passive infrared/Photocell	10…2000 lx	2…12 m	40°...160 °	10 s…12 min
FLOODLIGHT SENSOR 50 W	Motion/Light	Passive infrared/Photocell	10…2000 lx	2…12 m	40°...160 °	10 s…12 min

[1] Refer to www.ledvance.com/guarantee for precise conditions
[2] t[h]: L70/B50 @ 25 °C (T_a)/t[h]: L80/B10 @ 25 °C (T_a)

FLOODLIGHT PHOTOCELL

Floodlight with daylight sensor

PRODUCT FEATURES

- Aluminum housing with toughened glass, black
- Integrated photocell daylight sensor, auto on < 35 lx, auto off > 95 lx
- Symmetrical beam angle: 100° × 100°
- Mounting bracket with 30° angle and wide rotation
- Connection via flexible 1 m cable, wiring required

PRODUCT BENEFITS

- Automatically switches on and off according to the amount of available daylight thanks to photocell light sensor
- Always-on override, activated via special mains switching pattern
- No upper light output ratio (ULOR 0 %) when mounted at 0° tilt
- Impact resistance: IK08 (IK08 photocell sensor)
- 5 years guarantee

AREAS OF APPLICATION

- Replacement for floodlights with halogen lamps
- Outdoor use (IP65)
- Industry
- Public areas
- Construction areas

FURTHER PRODUCT DETAILS

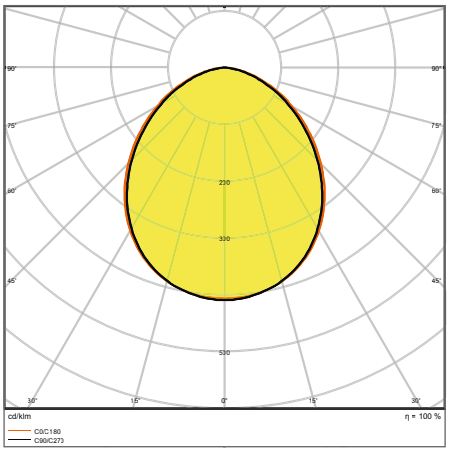

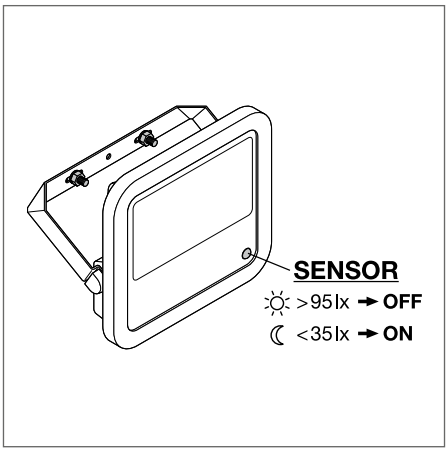

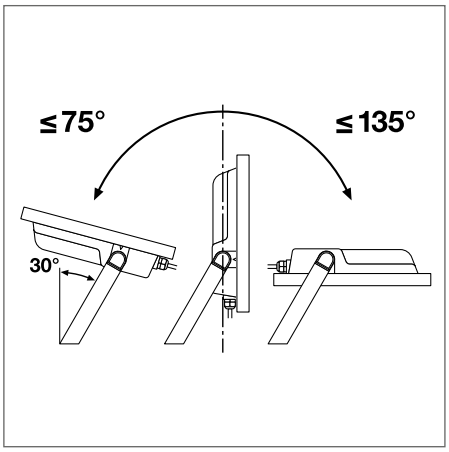

FL PFM 200 W 4000 K SYM 100 SL BK

The pictures shown in the catalog are for illustration purposes only. For information on size and color, please refer to the product table.

FLOODLIGHT PHOTOCELL

Floodlight with daylight sensor

PERFOR-MANCE CLASS

FLICKER VALUE <5%

CRI ≥80

IP65

IK08

LEDVANCE 5 year guarantee [1]

Product name	EAN (GTIN)	El.nr.	Replacement for	W	lm	lm/W	K	L80 [2]	∡°	L × W × H [mm] Ø × H [mm]
FL PFM 65 W 4000 K SYM 100 SL BK	4058075**461093**	**3203935**	500 W HAL	65	8000	125	4000	55000	100 × 100	268 × 237 × 49
FL PFM 80 W 4000 K SYM 100 SL BK	4058075**461130**	**3203936**	750 W HAL	80	10000	125	4000	55000	100 × 100	335 × 250 × 55
FL PFM 125 W 4000 K SYM 100 SL BK	4058075**461161**	**3203937**	1000 W HAL	125	15000	125	4000	55000	100 × 100	381 × 290 × 59
FL PFM 165 W 4000 K SYM 100 SL BK	4058075**461185**	**3203938**	1500 W HAL	165	20000	125	4000	55000	100 × 100	418 × 322 × 60
FL PFM 200 W 4000 K SYM 100 SL BK	4058075**461208**	**3203939**	2000 W HAL	200	25000	125	4000	55000	100 × 100	454 × 354 × 62

SENSOR PROPERTIES

Product name	Type of sensor	Sensor technology	Detection threshold of daylight sensor
FLOODLIGHT PHOTOCELL 65 W	Light	Photocell	35…95 lx
FLOODLIGHT PHOTOCELL 80 W	Light	Photocell	35…95 lx
FLOODLIGHT PHOTOCELL 125 W	Light	Photocell	35…95 lx
FLOODLIGHT PHOTOCELL 165 W	Light	Photocell	35…95 lx
FLOODLIGHT PHOTOCELL 200 W	Light	Photocell	35…95 lx

[1] Refer to www.ledvance.com/guarantee for precise conditions
[2] t[h]: L70/B50 @ 25 °C (T_a)/t[h]: L80/B10 @ 25 °C (T_a)

FLOODLIGHT COMPACT

Floodlight with reflector based, symmetric light distribution

Sensor*

PRODUCT FEATURES

- Luminaire efficacy: up to 100 lm/W
- Symmetrical beam angle: 100° × 100°
- Mounting bracket with 30° angle and wide rotation area
- Flexible motion and daylight sensor
- Sensor with 350° pan and 180° tilt

PRODUCT BENEFITS

- Robust, yet light and compact design
- Safe and very uniform illumination, due to frosted and tempered glass diffuser
- No upper light output ratio (ULOR 0 %) when mounted at 0° tilt
- Demand optimized illumination due to flexible and programmable sensor
- Easy adjustment of sensor range, daylight detection and hold time

AREAS OF APPLICATION

- Replacement for floodlights with halogen lamps
- Outdoor use (IP65)
- Public areas
- Building facades
- Construction areas

FURTHER PRODUCT DETAILS

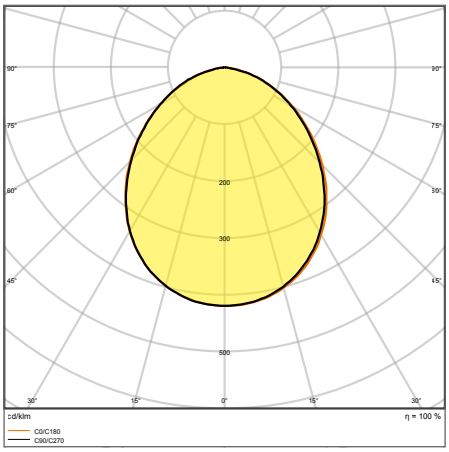

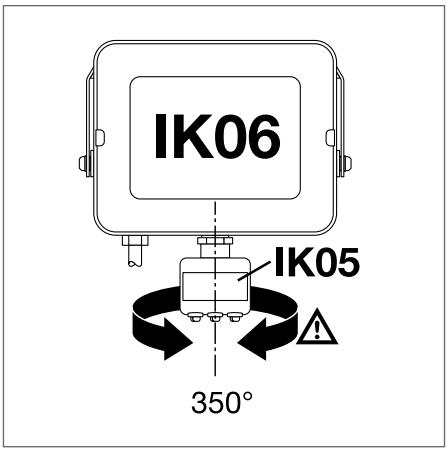

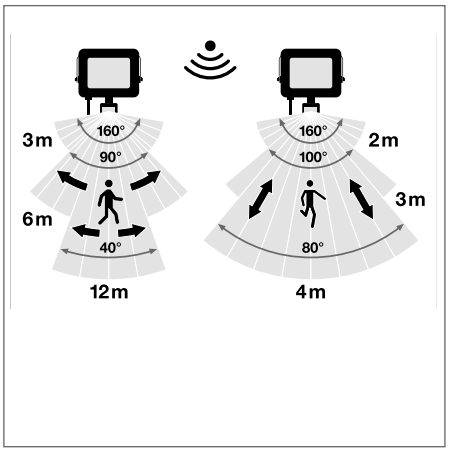

FL COMP V 135W 840 SYM 100 BK

The pictures shown in the catalog are for illustration purposes only. For information on size and color, please refer to the product table.

FLOODLIGHT COMPACT

Floodlight with reflector based, symmetric light distribution

VALUE CLASS

FLICKER VALUE <10 % | CRI ≥80 | IP65 | IK08 [1] | LEDVANCE 3 year guarantee [2]

Product name	EAN (GTIN)	El.nr.	Replacement for	W	lm	lm/W	K	L80 [3]	∡°	L × W × H [mm] Ø × H [mm]
FL COMP V 10W 830 SYM 100 BK	4058075**574557**	—	80 W HAL	10	900	90	3000	35000	100 × 100	114 × 109 × 29
FL COMP V 10W 830 SYM 100 WT	4058075**574571**	—	80 W HAL	10	900	90	3000	35000	100 × 100	114 × 109 × 29
FL COMP V 10W 840 SYM 100 BK	4058075**574595**	—	80 W HAL	10	1000	100	4000	35000	100 × 100	114 × 109 × 29
FL COMP V 10W 840 SYM 100 WT	4058075**574618**	—	80 W HAL	10	1000	100	4000	35000	100 × 100	114 × 109 × 29
FL COMP V 10W 865 SYM 100 BK	4058075**574656**	—	80 W HAL	10	1000	100	6500	35000	100 × 100	114 × 109 × 29
FL COMP V 10W 865 SYM 100 WT	4058075**574694**	—	80 W HAL	10	1000	100	6500	35000	100 × 100	114 × 109 × 29
FL COMP V 20W 830 SYM 100 BK	4058075**574731**	—	160 W HAL	20	1800	90	3000	35000	100 × 100	124 × 122 × 29
FL COMP V 20W 830 SYM 100 WT	4058075**574755**	—	160 W HAL	20	1800	90	3000	35000	100 × 100	124 × 122 × 29
FL COMP V 20W 840 SYM 100 BK	4058075**574779**	—	160 W HAL	20	2000	100	4000	35000	100 × 100	124 × 122 × 29
FL COMP V 20W 840 SYM 100 WT	4058075**574793**	—	160 W HAL	20	2000	100	4000	35000	100 × 100	124 × 122 × 29
FL COMP V 20W 865 SYM 100 BK	4058075**574816**	—	160 W HAL	20	2000	100	6500	35000	100 × 100	124 × 122 × 29
FL COMP V 20W 865 SYM 100 WT	4058075**574830**	—	160 W HAL	20	2000	100	6500	35000	100 × 100	124 × 122 × 29
FL COMP V 50W 830 SYM 100 BK	4058075**574854**	—	400 W HAL	50	4500	90	3000	35000	100 × 100	160 × 170 × 36
FL COMP V 50W 830 SYM 100 WT	4058075**574878**	—	400 W HAL	50	4500	90	3000	35000	100 × 100	160 × 170 × 36
FL COMP V 50W 840 SYM 100 BK	4058075**574892**	—	400 W HAL	50	5000	100	4000	35000	100 × 100	160 × 170 × 36
FL COMP V 50W 840 SYM 100 WT	4058075**574915**	—	400 W HAL	50	5000	100	4000	35000	100 × 100	160 × 170 × 36
FL COMP V 50W 865 SYM 100 BK	4058075**574939**	—	400 W HAL	50	5000	100	6500	35000	100 × 100	160 × 170 × 36
FL COMP V 50W 865 SYM 100 WT	4058075**574960**	—	400 W HAL	50	5000	100	6500	35000	100 × 100	160 × 170 × 36
FL COMP V 90W 830 SYM 100 BK	4058075**574984**	—	750 W HAL	90	8100	90	3000	35000	100 × 100	236 × 255 × 40
FL COMP V 90W 840 SYM 100 BK	4058075**575004**	—	750 W HAL	90	9000	100	4000	35000	100 × 100	236 × 255 × 40
FL COMP V 90W 865 SYM 100 BK	4058075**575080**	—	750 W HAL	90	9000	100	6500	35000	100 × 100	236 × 255 × 40
FL COMP V 135W 830 SYM 100 BK	4058075**575103**	—	1000 W HAL	135	12150	90	3000	35000	100 × 100	274 × 305 × 48
FL COMP V 135W 840 SYM 100 BK	4058075**575127**	—	1000 W HAL	135	13500	100	4000	35000	100 × 100	274 × 305 × 48
FL COMP V 135W 865 SYM 100 BK	4058075**575141**	—	1000 W HAL	135	13500	100	6500	35000	100 × 100	274 × 305 × 48
FL COMP V 180 W 830 SYM 100 BK	4058075**575165**	—	1500 W HAL	180	16800	90	3000	35000	100 × 100	300 × 340 × 55
FL COMP V 180W 840 SYM 100 BK	4058075**575189**	—	1500 W HAL	180	18000	100	4000	35000	100 × 100	300 × 340 × 55
FL COMP V 180W 865 SYM 100 BK	4058075**575202**	—	1500 W HAL	180	18000	100	6500	35000	100 × 100	300 × 340 × 55

[1] 10 W–50 W have IK06
[2] Refer to www.ledvance.com/guarantee for precise conditions
[3] t[h]: L70/B50 @ 25 °C (T_a)/t[h]: L80/B10 @ 25 °C (T_a)

FLOODLIGHT COMPACT SENSOR

Floodlight with motion and daylight sensor

VALUE CLASS

FLICKER VALUE <10 % | CRI ≥80 | IP65 | IK06 | LEDVANCE 3 year guarantee [1]

Product name	EAN (GTIN)	El.nr.	Replacement for	W	lm	lm/W	K	L80 [2]	∡°	L × W × H [mm] Ø × H [mm]
FL COMP SEN V 10W 830 SYM 100 BK	4058075**575226**	—	80 W HAL	10	900	90	3000	35000	100 × 100	153 × 109 × 53
FL COMP SEN V 10W 840 SYM 100 BK	4058075**575240**	—	80 W HAL	10	1000	100	4000	35000	100 × 100	153 × 109 × 53
FL COMP SEN V 20W 830 SYM 100 BK	4058075**575264**	—	160 W HAL	20	1800	90	3000	35000	100 × 100	165 × 122 × 53
FL COMP SEN V 20W 840 SYM 100 BK	4058075**575288**	—	160 W HAL	20	2000	100	4000	35000	100 × 100	165 × 122 × 53
FL COMP SEN V 50W 830 SYM 100 BK	4058075**575301**	—	400 W HAL	50	4500	90	3000	35000	100 × 100	202 × 170 × 60
FL COMP SEN V 50W 840 SYM 100 BK	4058075**575325**	—	400 W HAL	50	5000	100	4000	35000	100 × 100	202 × 170 × 60

SENSOR PROPERTIES

Product name	Type of sensor	Sensor technology	Detection threshold of daylight sensor	Detection range of motion sensor	Sensor detection angle	Sensor controlled switching time
FLOODLIGHT COMPACT SENSOR 10W	Motion/Light	Passive infrared/Photocell	10…2000 lx	2…12 m	40°...160°	10 s…12 min
FLOODLIGHT COMPACT SENSOR 20W	Motion/Light	Passive infrared/Photocell	10…2000 lx	2…12 m	40°...160°	10 s…12 min
FLOODLIGHT COMPACT SENSOR 50W	Motion/Light	Passive infrared/Photocell	10…2000 lx	2…12 m	40°...160°	10 s…12 min

[1] Refer to www.ledvance.com/guarantee for precise conditions
[2] t[h]: L70/B50 @ 25 °C (T_a)/t[h]: L80/B10 @ 25 °C (T_a)

FLOODLIGHT MAX LUMINAIRE HEAD

High-power floodlight for large area and sports lighting

1

2

3

PRODUCT FEATURES

- Modular, high-power floodlight with up to 137 lm/W
- Joint or separate installation possible with Floodlight Max power supply
- Available with 10°, 30° and 60° symmetric beam angles, and 50° × 110° asymmetric light distribution
- Mounting bracket for up to 180° tilting
- Highly-transparent, tempered glass diffuser

PRODUCT BENEFITS

- Very bright, robust and durable
- Energy savings of up to 45 % compared to luminaires that use conventional discharge lamps
- Easy dimming up to 50 % by wiring
- No upper light output ratio (ULOR 0 %) when mounted at 0° tilt
- 5 years guarantee

AREAS OF APPLICATION

- Outdoor use (IP66)
- Lighting of large areas
- Sports facilities
- Construction areas
- Direct replacement for luminaires using HID lamps

EQUIPMENT / ACCESSORIES

- Operation only with separately available official matching power supply

FURTHER PRODUCT DETAILS

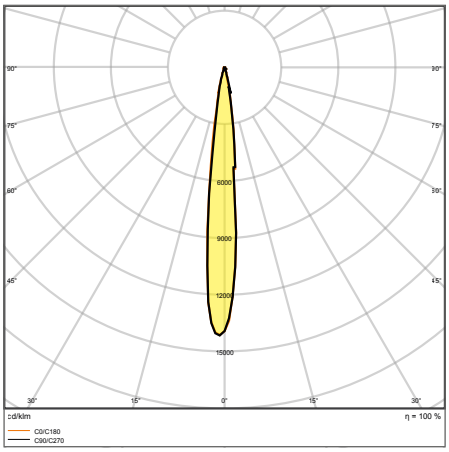

FL MAX LUM P 600W 757 SYM 10 WAL

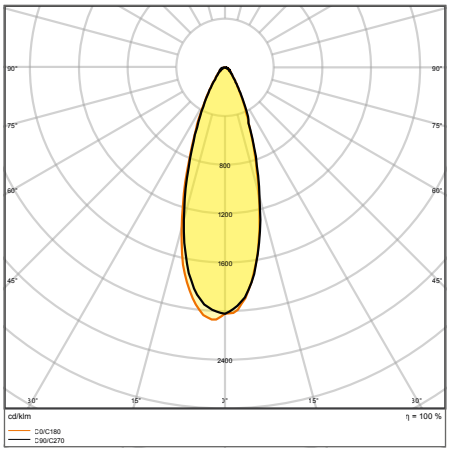

FL MAX LUM P 600W 757 SYM 30 WAL

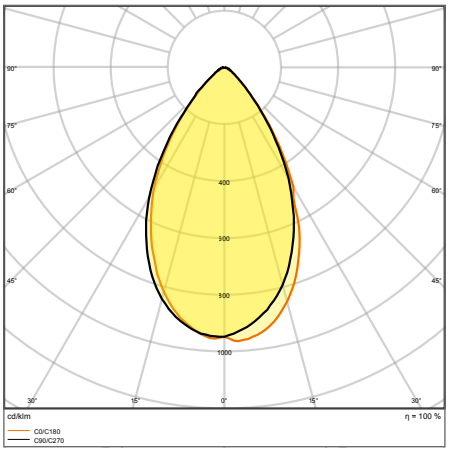

FL MAX LUM P 600W 757 SYM 60 WAL

The pictures shown in the catalog are for illustration purposes only. For information on size and color, please refer to the product table.

FURTHER PRODUCT DETAILS

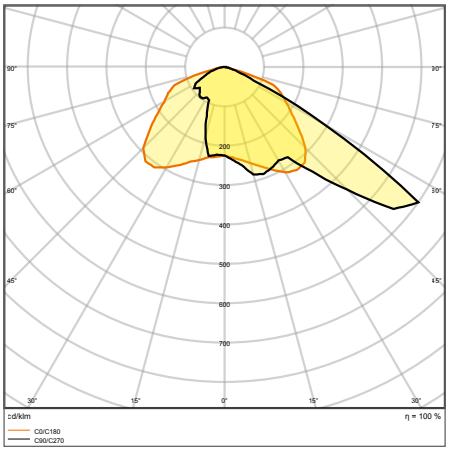

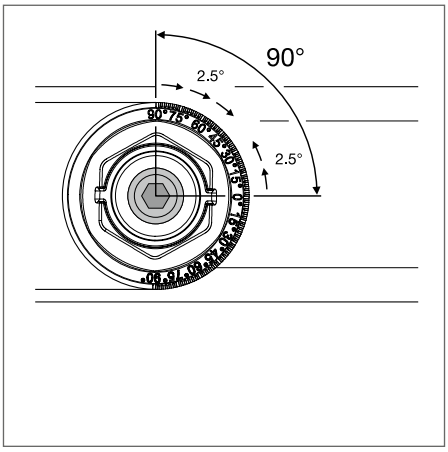

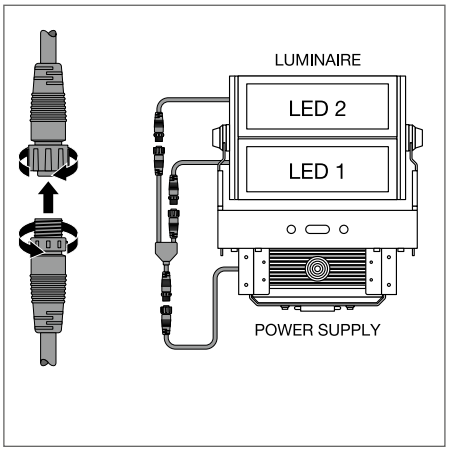

FL MAX LUM P 600W 757 ASYM50x110WAL

FLOODLIGHT MAX SYM 10

High-power floodlight with 10° symmetric light distribution for large area and sports lighting

PERFOR-MANCE CLASS | FLICKER VALUE <3% | CRI ≥70 | IP66 | IK08 | LEDVANCE 5 year guarantee [1]

Product name	EAN (GTIN)	El.nr.	W	lm	lm/W	K	L80 [2]	∡°	L × W × H [mm] Ø × H [mm]	No.
FL MAX LUM P 600W 757 SYM 10 WAL	4058075**580589**	—	600	78000	130	5700	75000	10	472 × 591 × 279	1
FL MAX LUM P 900W 757 SYM 10 WAL	4058075**580626**	—	900	117000	130	5700	75000	10	660 × 591 × 279	2
FL MAX LUM P 1200W 757 SYM 10 WAL	4058075**580664**	—	1200	155000	129	5700	75000	10	841 × 591 × 282	3

FLOODLIGHT MAX SYM 30

High-power floodlight with 30° symmetric light distribution for large area and sports lighting

PERFOR-MANCE CLASS | FLICKER VALUE <3% | CRI ≥70 | IP66 | IK08 | LEDVANCE 5 year guarantee [1]

Product name	EAN (GTIN)	El.nr.	W	lm	lm/W	K	L80 [2]	∡°	L × W × H [mm] Ø × H [mm]	No.
FL MAX LUM P 600W 757 SYM 30 WAL	4058075**580596**	—	600	81000	135	5700	75000	30	472 × 591 × 279	1
FL MAX LUM P 900W 757 SYM 30 WAL	4058075**580633**	—	900	121000	134	5700	75000	30	660 × 591 × 279	2
FL MAX LUM P 1200W 757 SYM 30 WAL	4058075**580671**	—	1200	162000	135	5700	75000	30	841 × 591 × 282	3

[1] Refer to www.ledvance.com/guarantee for precise conditions
[2] t[h]: L70/B50 @ 25 °C (T_a)/t[h]: L80/B10 @ 25 °C (T_a)

FLOODLIGHT MAX SYM 60

High-power floodlight with 60° symmetric light distribution for large area and sports lighting

PERFOR-MANCE CLASS | FLICKER VALUE <3% | CRI ≥70 | IP66 | IK08 | LEDVANCE 5 year guarantee [1]

Product name	EAN (GTIN)	El.nr.	W	lm	lm/W	K	L80 [2]	°	L × W × H [mm] Ø × H [mm]	No.
FL MAX LUM P 600W 757 SYM 60 WAL	4058075**580602**	—	600	80500	134	5700	75000	60	472 × 591 × 279	1
FL MAX LUM P 900W 757 SYM 60 WAL	4058075**580640**	—	900	120000	133	5700	75000	60	660 × 591 × 279	2
FL MAX LUM P 1200W 757 SYM 60 WAL	4058075**580688**	—	1200	161000	134	5700	75000	60	841 × 591 × 282	3

FLOODLIGHT MAX ASYM 50 × 110

High-power floodlight with 50° × 110° asymmetric light distribution for large area and sports lighting

PERFOR-MANCE CLASS | FLICKER VALUE <3% | CRI ≥70 | IP66 | IK08 | LEDVANCE 5 year guarantee [1]

Product name	EAN (GTIN)	El.nr.	W	lm	lm/W	K	L80 [2]	°	L × W × H [mm] Ø × H [mm]	No.
FL MAX LUM P 600W 757 ASYM 50x110 WAL	4058075**580619**	—	600	82000	137	5700	75000	50 × 110	472 × 591 × 279	1
FL MAX LUM P 900W 757 ASYM 50x110 WAL	4058075**580657**	—	900	123000	137	5700	75000	50 × 110	660 × 591 × 279	2
FL MAX LUM P 1200W 757 ASYM 50x110 WAL	4058075**580695**	—	1200	164000	137	5700	75000	50 × 110	841 × 591 × 282	3

[1] Refer to www.ledvance.com/guarantee for precise conditions
[2] t[h]: L70/B50 @ 25 °C (T_a)/t[h]: L80/B10 @ 25 °C (T_a)

FLOODLIGHT MAX POWER SUPPLY

Power supplies for FLOODLIGHT MAX luminaires

1

2

PRODUCT FEATURES

- Power supply for Floodlight Max luminaire heads
- Joint or separate installation with Floodlight Max luminaire head
- M20 and M25 PG glands for mains cable feed-in
- LED-module wiring by means of pre-installed fast quick release connector
- High surge protection: up to 10 kV (L/N-PE and L-N)

PRODUCT BENEFITS

- Highly robust and durable
- Quick and easy wiring, due to tool-free housing opening
- Optimized logistic, luminaire head and power supply arrive in individual packaging
- 5 years guarantee

AREAS OF APPLICATION

- Outdoor use (IP66)
- Sports facilities
- Construction areas

FURTHER PRODUCT DETAILS

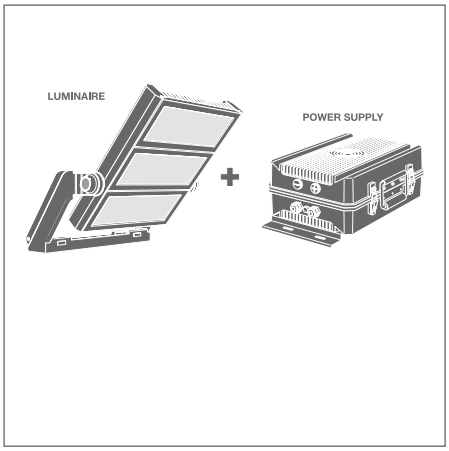

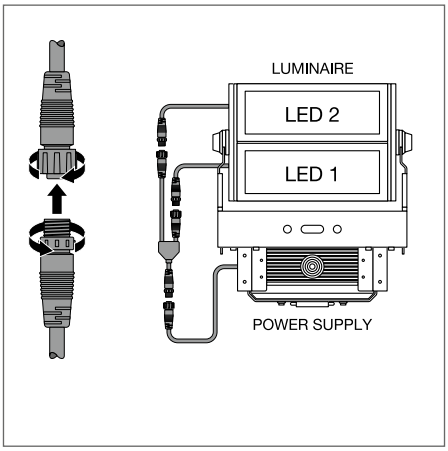

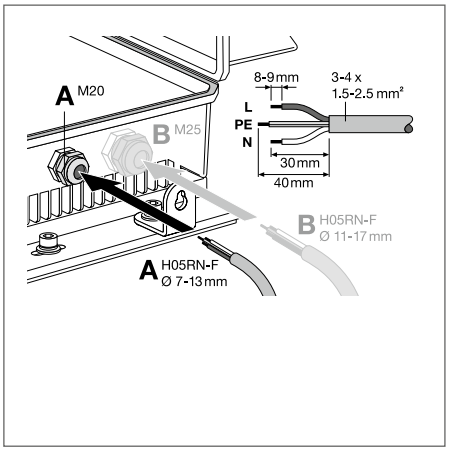

IP66 IK08 LEDVANCE 5 year guarantee [1]

Product name	EAN (GTIN)	El.nr.	W	L × W × H [mm] Ø × H [mm]	No.
FL MAX POWER SUPPLY P 600W WAL	4058075**580718**	—	600	188 × 447 × 146	1
FL MAX POWER SUPPLY P 900W WAL	4058075**580732**	—	900	270 × 447 × 166	2
FL MAX POWER SUPPLY P 1200W WAL	4058075**580749**	—	1200	270 × 447 × 166	2

[1] Refer to www.ledvance.com/guarantee for precise conditions
The pictures shown in the catalog are for illustration purposes only. For information on size and color, please refer to the product table.

FLOODLIGHT PERFORMANCE

IP66 floodlight with lens based light distribution up to 140 lm/W

PRODUCT FEATURES

- New versions with DALI 2.0 interface available, for light management system integration
- Aluminum die-cast housing, black (similar to RAL 9017) with toughened glass
- Robust design: IP66, IK08. –30 °C to +50 °C temperature resistance and surge protection < 10 kV
- Integrated breather for preventing condensation inside the luminaire
- Suitable for locations with fire hazards according to EN 60598-2-24 (D-mark)
- 2 m connection cable with open, crimped wire ends for flexible installation

PRODUCT BENEFITS

- Available in 5 power levels, for replacement of traditional luminaires, up to 2 000 W (HAL)
- Available in 4 light distributions for optimum illumination of a wide range of applications
- Suitable for wall or mast mounting thanks to angled bracket with a great rotation range
- Highly efficient directional light through single lenses, with up to 140 lm/W luminous efficacy
- 5 years guarantee

AREAS OF APPLICATION

- Direct replacement for luminaires using HID lamps
- Outdoor use (IP66)
- Public areas
- Industry
- Sports facilities

FURTHER PRODUCT DETAILS

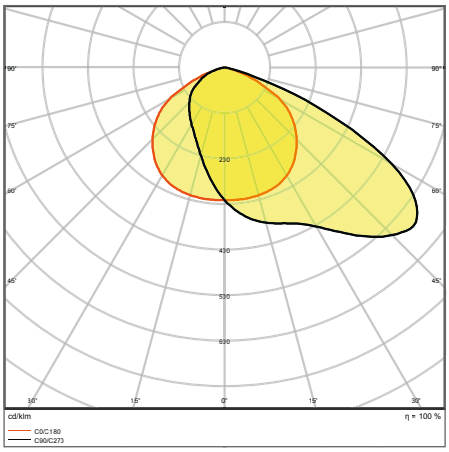

FL PFM ASYM 55x110 290W 4000K BK

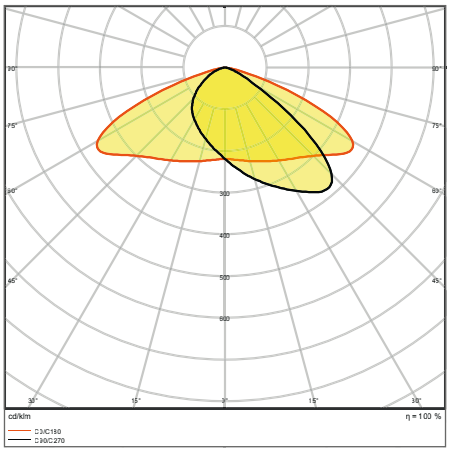

FL PFM ASYM 45x140 290W 4000K BK

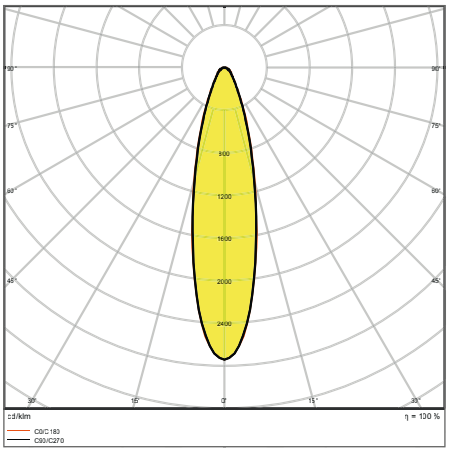

FL PFM SYM R30 290W 4000K BK

The pictures shown in the catalog are for illustration purposes only. For information on size and color, please refer to the product table.

FURTHER PRODUCT DETAILS

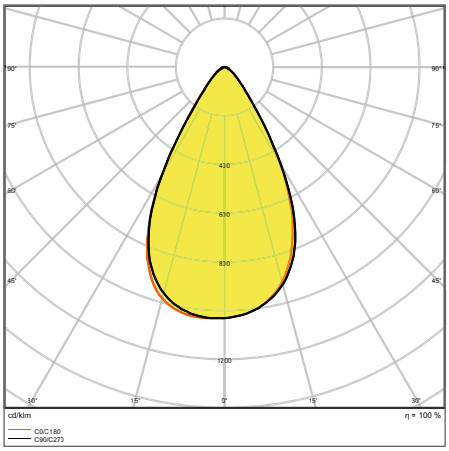

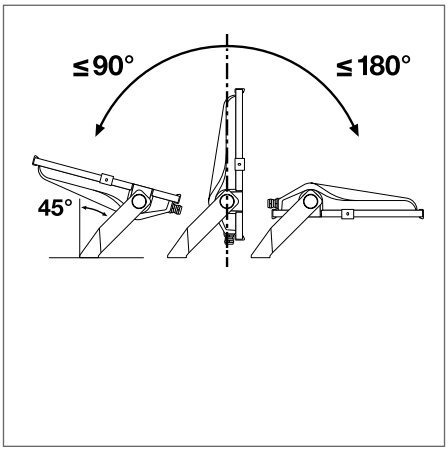

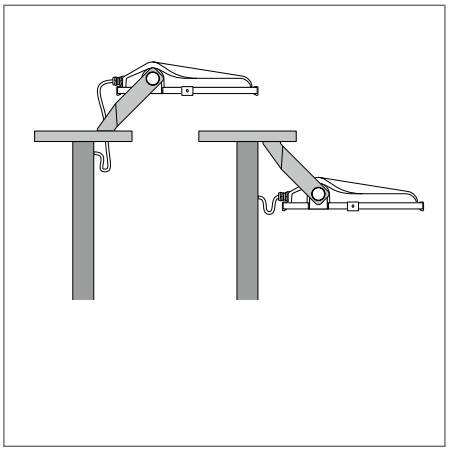

FL PFM SYM 60 290W4000K BK

FLOODLIGHT PERFORMANCE ASYM 55 × 110

Floodlight with wide beam, asymmetric light distribution for various application areas

PERFORMANCE CLASS

FLICKER VALUE <10 % [1]

CRI >80

IP66

IK08

LEDVANCE 5 year guarantee [2]

Product name	EAN (GTIN)	El.nr.	Replacement for	W	lm	lm/W	K	L80 [3]		L × W × H [mm] Ø × H [mm]
FL PFM ASYM 55x110 50 W 3000 K BK	4058075**353299**	**3242415**	500 W HAL	50	5800	115	3000	70000	55 × 110	314 × 240 × 63
FL PFM ASYM 55x110 50 W 4000 K BK	4058075**353305**	**3242416**	500 W HAL	50	6300	125	4000	70000	55 × 110	314 × 240 × 63
FL PFM ASYM 55x110 100 W 3000 K BK	4058075**353312**	**3242417**	1000 W HAL	100	11900	120	3000	70000	55 × 110	418 × 330 × 77
FL PFM ASYM 55x110 100 W 4000 K BK	4058075**353527**	**3242418**	1000 W HAL	100	12900	130	4000	70000	55 × 110	418 × 330 × 77
FL PFM ASYM 55x110 150 W 3000 K BK	4058075**353534**	**3242419**	1500 W HAL	150	18400	125	3000	70000	55 × 110	451 × 330 × 77
FL PFM ASYM 55x110 150 W 4000 K BK	4058075**353541**	**3242420**	1500 W HAL	150	19900	135	4000	70000	55 × 110	451 × 330 × 77
FL PFM ASYM 55x110 200 W 3000 K BK	4058075**353558**	**3242421**	1500 W HAL	200	24400	130	3000	70000	55 × 110	494 × 395 × 87
FL PFM ASYM 55x110 200 W 4000 K BK	4058075**353565**	**3242422**	1500 W HAL	200	26400	140	4000	70000	55 × 110	494 × 395 × 87
FL PFM ASYM 55x110 290 W 3000 K BK	4058075**353572**	**3242423**	2000 W HAL	290	35600	125	3000	70000	55 × 110	567 × 465 × 97
FL PFM ASYM 55x110 290 W 4000 K BK	4058075**353602**	**3242424**	2000 W HAL	290	38500	135	4000	70000	55 × 110	567 × 465 × 97

[1] Applies to 100 W–290 W
[2] Refer to www.ledvance.com/guarantee for precise conditions
[3] t[h]: L70/B50 @ 25 °C (T_a)/t[h]: L80/B10 @ 25 °C (T_a)

FLOODLIGHT PERFORMANCE ASYM 45 × 140

Floodlight with very wide beam, asymmetric light distribution for area lighting

PERFORMANCE CLASS | D | FLICKER VALUE <10% [1] | CRI >80 | IP66 | IK08 | LEDVANCE 5 year guarantee [2]

Product name	EAN (GTIN)	El.nr.	Replacement for	W	lm	lm/W	K	L80 [3]	∠°	L × W × H [mm] Ø × H [mm]
FL PFM ASYM 45x140 50 W 3000 K BK	4058075**353619**	**3242425**	500 W HAL	50	5700	115	3000	70000	45 × 140	314 × 240 × 63
FL PFM ASYM 45x140 50 W 4000 K BK	4058075**353626**	**3242426**	500 W HAL	50	6200	125	4000	70000	45 × 140	314 × 240 × 63
FL PFM ASYM 45x140 100 W 3000 K BK	4058075**353633**	**3242427**	1000 W HAL	100	11800	120	3000	70000	45 × 140	418 × 330 × 77
FL PFM ASYM 45x140 100 W 4000 K BK	4058075**353688**	**3242428**	1000 W HAL	100	12800	130	4000	70000	45 × 140	418 × 330 × 77
FL PFM ASYM 45x140 150 W 3000 K BK	4058075**353695**	**3242429**	1500 W HAL	150	18300	120	3000	70000	45 × 140	451 × 330 × 77
FL PFM ASYM 45x140 150 W 4000 K BK	4058075**353701**	**3242430**	1500 W HAL	150	19800	130	4000	70000	45 × 140	451 × 330 × 77
FL PFM ASYM 45x140 200 W 3000 K BK	4058075**353718**	**3242431**	1500 W HAL	200	24200	130	3000	70000	45 × 140	494 × 395 × 87
FL PFM ASYM 45x140 200 W 4000 K BK	4058075**353725**	**3242432**	1500 W HAL	200	26200	140	4000	70000	45 × 140	494 × 395 × 87
FL PFM ASYM 45x140 290 W 3000 K BK	4058075**353732**	**3242433**	2000 W HAL	290	35300	120	3000	70000	45 × 140	567 × 465 × 97
FL PFM ASYM 45x140 290 W 4000 K BK	4058075**353749**	**3242434**	2000 W HAL	290	38200	130	4000	70000	45 × 140	567 × 465 × 97

FLOODLIGHT PERFORMANCE SYM R30

Floodlight with rotational symmetric light distribution for high mast area lighting

PERFORMANCE CLASS | D | FLICKER VALUE <10% | CRI >80 | IP66 | IK08 | LEDVANCE 5 year guarantee [2]

Product name	EAN (GTIN)	El.nr.	Replacement for	W	lm	lm/W	K	L80 [3]	∠°	L × W × H [mm] Ø × H [mm]
FL PFM SYM R30 150 W 3000 K BK	4058075**353756**	**3242435**	1500 W HAL	150	18700	125	3000	70000	30	451 × 330 × 77
FL PFM SYM R30 150 W 4000 K BK	4058075**353763**	**3242436**	1500 W HAL	150	20200	135	4000	70000	30	451 × 330 × 77
FL PFM SYM R30 200 W 3000 K BK	4058075**353770**	**3242437**	1500 W HAL	200	24800	130	3000	70000	30	494 × 395 × 87
FL PFM SYM R30 200 W 4000 K BK	4058075**353787**	**3242438**	1500 W HAL	200	26800	140	4000	70000	30	494 × 395 × 87
FL PFM SYM R30 290 W 3000 K BK	4058075**353794**	**3242439**	2000 W HAL	290	36200	125	3000	70000	30	567 × 465 × 97
FL PFM SYM R30 290 W 4000 K BK	4058075**353800**	**3242450**	2000 W HAL	290	39100	135	4000	70000	30	567 × 465 × 97

FLOODLIGHT PERFORMANCE SYM 60

Floodlight with symmetric light distribution for medium to high mast area lighting

PERFORMANCE CLASS | D | FLICKER VALUE <10% | CRI >80 | IP66 | IK08 | LEDVANCE 5 year guarantee [2]

Product name	EAN (GTIN)	El.nr.	Replacement for	W	lm	lm/W	K	L80 [3]	∠°	L × W × H [mm] Ø × H [mm]
FL PFM SYM 60 150 W 3000 K BK	4058075**540989**	**3202848**	1500 W HAL	150	19800	132	3000	70000	60 × 60	451 × 330 × 77
FL PFM SYM 60 150 W 4000 K BK	4058075**540996**	**3202849**	1500 W HAL	150	21000	140	4000	70000	60 × 60	451 × 330 × 77
FL PFM SYM 60 200 W 3000 K BK	4058075**541009**	**3202850**	1500 W HAL	200	26400	132	3000	70000	60 × 60	494 × 395 × 87
FL PFM SYM 60 200 W 4000 K BK	4058075**541016**	**3202851**	1500 W HAL	200	28000	140	4000	70000	60 × 60	494 × 395 × 87
FL PFM SYM 60 290 W 3000 K BK	4058075**541023**	**3202852**	2000 W HAL	290	38300	132	3000	70000	60 × 60	567 × 465 × 97
FL PFM SYM 60 290 W 4000 K BK	4058075**541030**	**3202853**	2000 W HAL	290	40600	140	4000	70000	60 × 60	567 × 465 × 97

[1] Applies to 100 W–290 W | [2] Refer to www.ledvance.com/guarantee for precise conditions | [3] t[h]: L70/B50 @ 25 °C (T_a)/t[h]: L80/B10 @ 25 °C (T_a)

FLOODLIGHT PERFORMANCE DALI ASYM 55 × 110

DALI 2.0 based floodlight with wide beam, asymmetric light distribution for various application areas

PERFORMANCE CLASS | VIVA RES | EN EC | TÜV SÜD | FLICKER VALUE <10 % | CRI >80 | IP66 | IK08 | LEDVANCE 5 year guarantee [1]

Product name	EAN (GTIN)	El.nr.	Replacement for	W	lm	lm/W	K	L80 [2]	°		L × W × H [mm] Ø × H [mm]
FL PFM DA 50W 3000K ASYM 55X110 BK	4058075**760523**	**3252657**	500 W HAL	50	5800	116	3000	70000	55 × 110	DALI-2	314 × 240 × 63
FL PFM DA 50W 4000K ASYM 55X110 BK	4058075**760530**	**3252658**	500 W HAL	50	6300	126	4000	70000	55 × 110	DALI-2	314 × 240 × 63
FL PFM DA 100W 3000K ASYM 55X110 BK	4058075**760547**	**3252659**	1000 W HAL	100	11900	119	3000	70000	55 × 110	DALI-2	418 × 330 × 77
FL PFM DA 100W 4000K ASYM 55X110 BK	4058075**760554**	**3252660**	1000 W HAL	100	12900	129	4000	70000	55 × 110	DALI-2	418 × 330 × 77
FL PFM DA 150W 3000K ASYM 55X110 BK	4058075**760561**	**3252661**	1500 W HAL	150	18400	122	3000	70000	55 × 110	DALI-2	451 × 330 × 77
FL PFM DA 150W 4000K ASYM 55X110 BK	4058075**760578**	**3252662**	1500 W HAL	150	19900	132	4000	70000	55 × 110	DALI-2	451 × 330 × 77
FL PFM DA 200W 3000K ASYM 55X110 BK	4058075**760585**	**3252663**	1500 W HAL	200	24400	122	3000	70000	55 × 110	DALI-2	494 × 395 × 87
FL PFM DA 200W 4000K ASYM 55X110 BK	4058075**760592**	**3252664**	1500 W HAL	200	26400	132	4000	70000	55 × 110	DALI-2	494 × 395 × 87
FL PFM DA 290W 3000K ASYM 55X110 BK	4058075**760608**	**3252665**	2000 W HAL	290	35600	122	3000	70000	55 × 110	DALI-2	567 × 465 × 97
FL PFM DA 290W 4000K ASYM 55X110 BK	4058075**760615**	**3252666**	2000 W HAL	290	38500	132	4000	70000	55 × 110	DALI-2	567 × 465 × 97

FLOODLIGHT PERFORMANCE DALI ASYM 45 × 140

DALI 2.0 based floodlight with very wide beam, asymmetric light distribution for area lighting

PERFORMANCE CLASS | VIVA RES | EN EC | TÜV SÜD | FLICKER VALUE <10 % | CRI >80 | IP66 | IK08 | LEDVANCE 5 year guarantee [1]

Product name	EAN (GTIN)	El.nr.	Replacement for	W	lm	lm/W	K	L80 [2]	°		L × W × H [mm] Ø × H [mm]
FL PFM DA 50W 3000K ASYM 45X140 BK	4058075**760622**	**3252667**	500 W HAL	50	5700	114	3000	70000	45 × 140	DALI-2	314 × 240 × 63
FL PFM DA 50W 4000K ASYM 45X140 BK	4058075**760639**	**3252668**	500 W HAL	50	6200	124	4000	70000	45 × 140	DALI-2	314 × 240 × 63
FL PFM DA 100W 3000K ASYM 45X140 BK	4058075**760646**	**3252669**	1000 W HAL	100	11800	118	3000	70000	45 × 140	DALI-2	418 × 330 × 77
FL PFM DA 100W 4000K ASYM 45X140 BK	4058075**760653**	**3252670**	1000 W HAL	100	12800	128	4000	70000	45 × 140	DALI-2	418 × 330 × 77
FL PFM DA 150W 3000K ASYM 45X140 BK	4058075**760660**	**3252671**	1500 W HAL	150	18300	122	3000	70000	45 × 140	DALI-2	451 × 330 × 77
FL PFM DA 150W 4000K ASYM 45X140 BK	4058075**760677**	**3252672**	1500 W HAL	150	19800	132	4000	70000	45 × 140	DALI-2	451 × 330 × 77
FL PFM DA 200W 3000K ASYM 45X140 BK	4058075**760684**	**3252673**	1500 W HAL	200	24200	121	3000	70000	45 × 140	DALI-2	494 × 395 × 87
FL PFM DA 200W 4000K ASYM 45X140 BK	4058075**760691**	**3252674**	1500 W HAL	200	26200	131	4000	70000	45 × 140	DALI-2	494 × 395 × 87
FL PFM DA 290W 3000K ASYM 45X140 BK	4058075**760707**	**3252675**	2000 W HAL	290	35300	121	3000	70000	45 × 140	DALI-2	567 × 465 × 97
FL PFM DA 290W 4000K ASYM 45X140 BK	4058075**760714**	**3252676**	2000 W HAL	290	38200	131	4000	70000	45 × 140	DALI-2	567 × 465 × 97

[1] Refer to www.ledvance.com/guarantee for precise conditions
[2] t[h]: L70/B50 @ 25 °C (T_a)/t[h]: L80/B10 @ 25 °C (T_a)

FLOODLIGHT PERFORMANCE DALI SYM R30

DALI 2.0 based floodlight with rotational symmetric light distribution for high mast area lighting

PERFORMANCE CLASS | VIVA RES | EN | TÜV SÜD | FLICKER VALUE <10% | CRI >80 | IP66 | IK08 | LEDVANCE 5 year guarantee [1]

Product name	EAN (GTIN)	El.nr.	Replacement for	W	lm	lm/W	K	L80 [2]	∡°		L × W × H [mm] Ø × H [mm]
FL PFM DA 150W 3000K SYM R30 BK	4058075**760721**	**3252677**	1500 W HAL	150	18700	124	3000	70000	30	DALI-2	451 × 330 × 77
FL PFM DA 150W 4000K SYM R30 BK	4058075**760738**	**3252678**	1500 W HAL	150	20200	134	4000	70000	30	DALI-2	451 × 330 × 77
FL PFM DA 200W 3000K SYM R30 BK	4058075**760745**	**3252679**	1500 W HAL	200	24800	124	3000	70000	30	DALI-2	494 × 395 × 87
FL PFM DA 200W 4000K SYM R30 BK	4058075**760752**	**3252680**	1500 W HAL	200	26800	134	4000	70000	30	DALI-2	494 × 395 × 87
FL PFM DA 290W 3000K SYM R30 BK	4058075**760769**	**3252681**	2000 W HAL	290	36200	124	3000	70000	30	DALI-2	567 × 465 × 97
FL PFM DA 290W 4000K SYM R30 BK	4058075**760776**	**3252682**	2000 W HAL	290	39100	134	4000	70000	30	DALI-2	567 × 465 × 97

FLOODLIGHT PERFORMANCE DALI SYM 60

DALI 2.0 based floodlight with symmetric light distribution for medium to high mast area lighting

PERFORMANCE CLASS | VIVA RES | EN | TÜV SÜD | FLICKER VALUE <10% | CRI >80 | IP66 | IK08 | LEDVANCE 5 year guarantee [1]

Product name	EAN (GTIN)	El.nr.	Replacement for	W	lm	lm/W	K	L80 [2]	∡°		L × W × H [mm] Ø × H [mm]
FL PFM DA 150W 3000K SYM 60 BK	4058075**760783**	**3252683**	1500 W HAL	150	19800	132	3000	70000	60 × 60	DALI-2	451 × 330 × 77
FL PFM DA 150W 4000K SYM 60 BK	4058075**760790**	**3252684**	1500 W HAL	150	21000	140	4000	70000	60 × 60	DALI-2	451 × 330 × 77
FL PFM DA 200W 3000K SYM 60 BK	4058075**760837**	**3252685**	1500 W HAL	200	26400	132	3000	70000	60 × 60	DALI-2	494 × 395 × 87
FL PFM DA 200W 4000K SYM 60 BK	4058075**760844**	**3252686**	1500 W HAL	200	28000	140	4000	70000	60 × 60	DALI-2	494 × 395 × 87
FL PFM DA 290W 3000K SYM 60 BK	4058075**760851**	**3252687**	2000 W HAL	290	38300	132	3000	70000	60 × 60	DALI-2	567 × 465 × 97
FL PFM DA 290W 4000K SYM 60 BK	4058075**760868**	**3252688**	2000 W HAL	290	40600	140	4000	70000	60 × 60	DALI-2	567 × 465 × 97

[1] Refer to www.ledvance.com/guarantee for precise conditions
[2] t[h]: L70/B50 @ 25 °C (T_a)/t[h]: L80/B10 @ 25 °C (T_a)

FLOODLIGHT AREA

Floodlight with lens based asymmetric light distribution up to 140 lm/W

PRODUCT FEATURES

- Asymmetric light distribution: 48° × 92°
- Robust design: IP65, IK08, –30 °C to +50 °C temperature resistance, up to 6 kV surge protection (L/N-PE)
- Integrated breather for preventing condensation inside the luminaire
- Pre-installed, flexible 1m cable (H05RN-F)

PRODUCT BENEFITS

- Energy savings of up to 90 % compared to halogen lamp floodlights
- Energy savings of up to 45 % compared to luminaires that use conventional discharge lamps
- High light uniformity
- No upper light output ration (ULOR 0 %) when mounted at 0° tilt
- 5 years guarantee

AREAS OF APPLICATION

- Direct replacement for luminaires using HID lamps
- Outdoor use (IP65)
- Public areas & parking
- Industry
- Sports facilities

FURTHER PRODUCT DETAILS

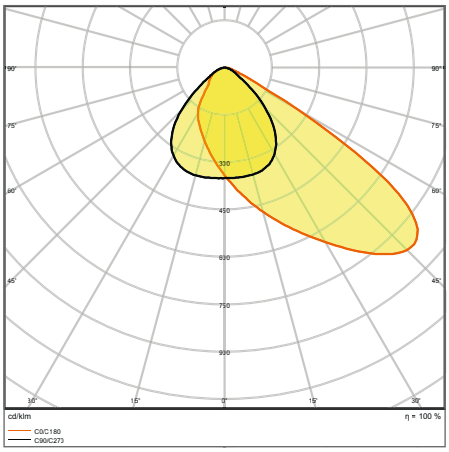

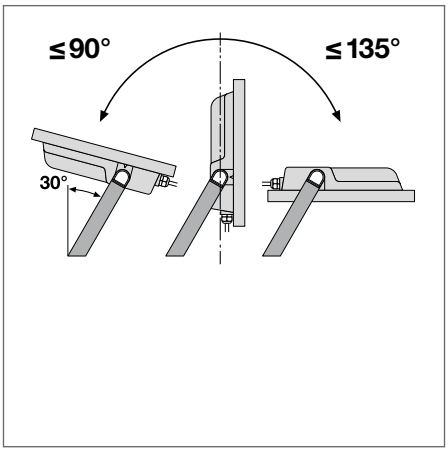

FL AREA 105W 840 ASYM 48X92 BK

The pictures shown in the catalog are for illustration purposes only. For information on size and color, please refer to the product table.

FLOODLIGHT AREA

Floodlight with lens based asymmetric light distribution up to 140 lm/W

VALUE CLASS

FLICKER VALUE <10 % | CRI ≥80 | IP65 | IK08 | LEDVANCE 5 year guarantee [1]

Product name	EAN (GTIN)	El.nr.	Replacement for	W	lm	lm/W	K	L80 [2]	∡°	L × W × H [mm] Ø × H [mm]
FL AREA ASYM 48x92 72 W 3000 K BK	4058075**539730**	—	750 W HAL	72	9200	129	3000	50000	48 × 92	381 × 290 × 59
FL AREA ASYM 48x92 72 W 4000 K BK	4058075**539747**	—	750 W HAL	72	10000	139	4000	50000	48 × 92	381 × 290 × 59
FL AREA ASYM 48x92 105 W 3000 K BK	4058075**539754**	—	1000 W HAL	105	13750	132	3000	50000	48 × 92	418 × 322 × 60
FL AREA ASYM 48x92 105 W 4000 K BK	4058075**539761**	—	1000 W HAL	105	15000	143	4000	50000	48 × 92	418 × 322 × 60
FL AREA ASYM 48x92 145 W 3000 K BK	4058075**539778**	—	1500 W HAL	145	18400	129	3000	50000	48 × 92	454 × 354 × 62
FL AREA ASYM 48x92 145 W 4000 K BK	4058075**539785**	—	1500 W HAL	145	20000	138	4000	50000	48 × 92	454 × 354 × 62

[1] Refer to www.ledvance.com/guarantee for precise conditions
[2] t[h]: L70/B50 @ 25 °C (T_a)/t[h]: L80/B10 @ 25 °C (T_a)

STREETLIGHTS

VERSATILE, DURABLE AND HIGHLY SUSTAINABLE ILLUMINATION OF URBAN SPACES

STREETLIGHT FLEX

PERFOR-MANCE CLASS

Page 220

STREETLIGHT FLEX
SMALL, MEDIUM & LARGE

HIGHLY FLEXIBLE AND EFFICIENT STREETLIGHTS

- Modern and durable design for long lasting performance, up to 100 000 h L90/B10 (at 25 °C)
- Extremely high efficiency, up to 155 lm/W, for great TCO in many replacement scenarios
- Broad range for wide application fit in road lighting and parking: 7 LED configurations, 3 CCTs, 2 beam angles

STREETLIGHT FLEX ACCESSORIES

PERFOR-MANCE CLASS

Page 226

MOUNTING ACCESSORIES FOR INCREASED VERSATILITY

- Larger pole adapter, suitable for 76 mm poles
- Reduction piece, enabling the standard adapter to be installed on 42 mm poles
- Suitable for all Streetlight Flex types

VERY SIMPLE AND FLEXIBLE INSTALLATION

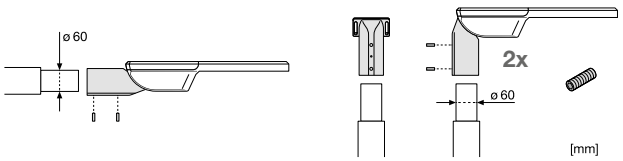

- Pole adapter for 60 mm pole diameter is included as standard with all Streetlight Flex luminaires
- The flexible design allows for either side-entry or post-top installation of the luminaire
- +/– 15° tilt angle adjustment without opening the housing

STREETLIGHT FLEX: EFFICIENT, DURABLE, FLEXIBLE

Designed for ease of installation and featuring materials of the highest quality, an extremely long service life and two different light distribution patterns, Streetlight Flex is our efficient and flexible answer to the high demands placed on modern street and parking lot lighting.

LIGHT DISTRIBUTION OPTIONS

RV25ST light distribution
- For normal roads with a typical width equal to or greater than the road height (width approx. 1 to 1.25 × pole height)
- For rectangular-shaped parking areas in front of the pole

RW35ST light distribution
- For very wide roads with road width greater than the pole height
- For square-shaped parking and area lighting in front of the pole

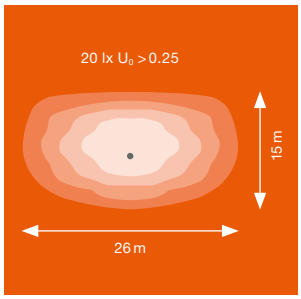

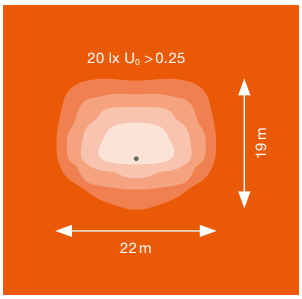

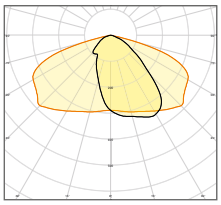

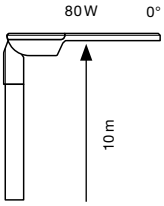

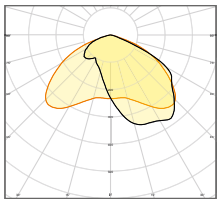

WIRING IS TOOL-FREE, FAST AND CONVENIENT

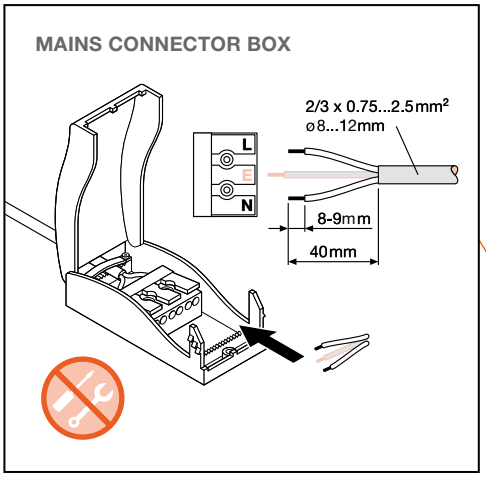

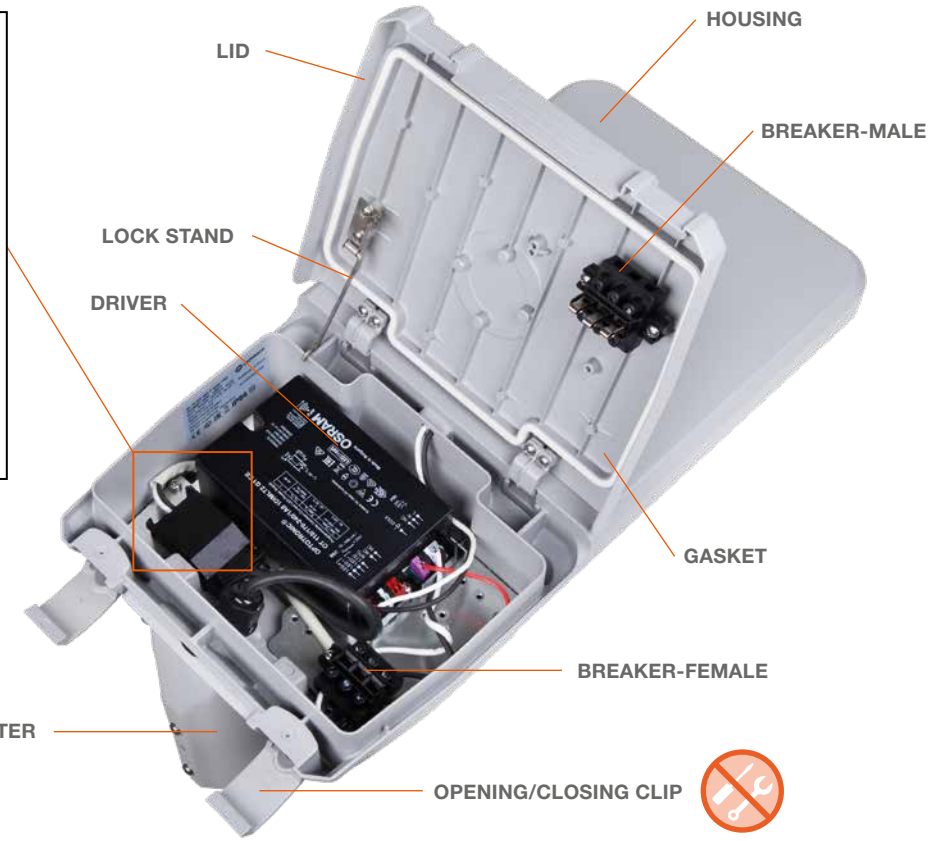

STREETLIGHT FLEX SMALL

IP66 streetlight with up to 144 lm/W

PRODUCT FEATURES

- High luminous efficacy: up to 144 lm/W
- Very long lifetime (L90/B10): up to 100 000 h (at 25 °C)
- Spigot included, suitable for 48…60 mm diameter poles
- Adjustable spigot for both side-entry and post-top installation
- +/–15° tilt angle adjustment without opening the housing

PRODUCT BENEFITS

- Durable IP66 & IK08 design and highest quality component selection for long lasting performance
- Easy installation due to tool-free housing opening and push button wiring terminal
- High light uniformity
- No upper light output ratio (ULOR 0 %) when mounted at 0° tilt
- 5 years guarantee

AREAS OF APPLICATION

- Outdoor use (IP66)
- M-, C- and P-class roads acc. to EN 13201
- Parking
- Public areas
- Industry

EQUIPMENT / ACCESSORIES

- Spigot for 42 and 76 mm poles available separately

FURTHER PRODUCT DETAILS

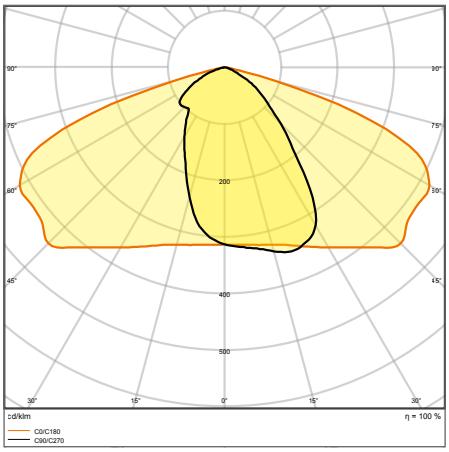

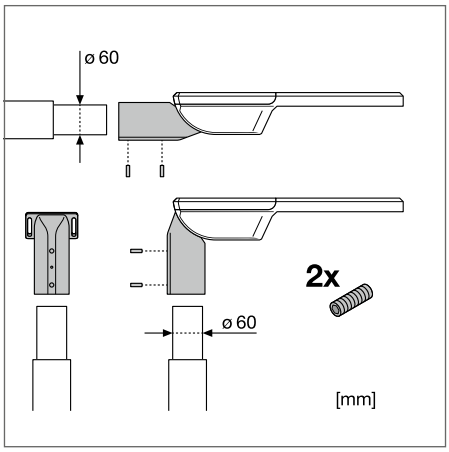

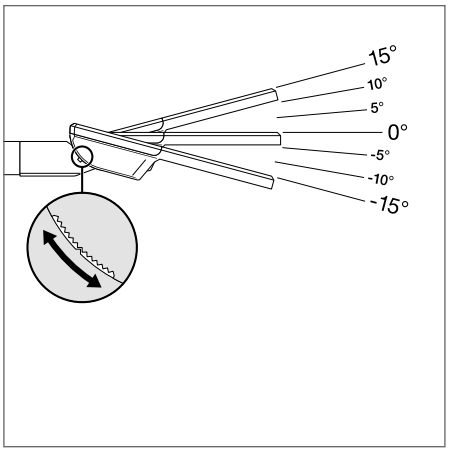

SL FLEX SM RV25ST P 36W 740 WAL

The pictures shown in the catalog are for illustration purposes only. For information on size and color, please refer to the product table.

STREETLIGHT FLEX SMALL RV25ST

Very wide light distribution for general road lighting

PERFOR-MANCE CLASS

FLICKER VALUE ≤10%

IP66

IK08

LEDVANCE 5 year guarantee [1]

Product name	EAN (GTIN)	El.nr.	W	lm	lm/W	K	L90 [2]	°	CRI	L × W × H [mm] Ø × H [mm]
SL FLEX SM RV25ST P 13W 727 WAL	4058075**552234**	**3503500**	13	1650	127	2700	100000	25 × 145	70	445 × 250 × 90
SL FLEX SM RV25ST P 13W 730 WAL	4058075**552241**	**3503501**	13	1700	131	3000	100000	25 × 145	70	445 × 250 × 90
SL FLEX SM RV25ST P 13W 740 WAL	4058075**552258**	**3503502**	13	1780	137	4000	100000	25 × 145	70	445 × 250 × 90
SL FLEX SM RV25ST P 25W 727 WAL	4058075**552265**	**3503503**	25	3270	131	2700	100000	25 × 145	70	445 × 250 × 90
SL FLEX SM RV25ST P 25W 730 WAL	4058075**552272**	**3503504**	25	3370	135	3000	100000	25 × 145	70	445 × 250 × 90
SL FLEX SM RV25ST P 25W 740 WAL	4058075**552289**	**3503505**	25	3550	141	4000	100000	25 × 145	70	445 × 250 × 90
SL FLEX SM RV25ST P 36W 727 WAL	4058075**552296**	**3503506**	36	4850	135	2700	100000	25 × 145	70	445 × 250 × 90
SL FLEX SM RV25ST P 36W 730 WAL	4058075**552302**	**3503507**	36	4950	138	3000	100000	25 × 145	70	445 × 250 × 90
SL FLEX SM RV25ST P 36W 740 WAL	4058075**552319**	**3503508**	36	5180	144	4000	100000	25 × 145	70	445 × 250 × 90

[1] Refer to www.ledvance.com/guarantee for precise conditions
[2] t[h]: L90 / B10 @ 25 °C (T_a)

STREETLIGHT FLEX MEDIUM

IP66 streetlight with up to 147 lm/W

PRODUCT FEATURES

- High luminous efficacy: up to 147 lm/W
- Very long lifetime (L90/B10): up to 100 000 h (at 25 °C)
- Spigot included, suitable for 48…60 mm diameter poles
- Adjustable spigot for both side-entry and post-top installation
- +/–15° tilt angle adjustment without opening the housing

PRODUCT BENEFITS

- Durable IP66 & IK08 design and highest quality component selection for long lasting performance
- Easy installation due to tool-free housing opening and push button wiring terminal
- High light uniformity
- No upper light output ratio (ULOR 0 %) when mounted at 0° tilt
- 5 years guarantee

AREAS OF APPLICATION

- Outdoor use (IP66)
- M-, C- and P-class roads acc. to EN 13201
- Parking
- Public areas
- Industry

EQUIPMENT / ACCESSORIES

- Spigot for 42 and 76 mm poles available separately

FURTHER PRODUCT DETAILS

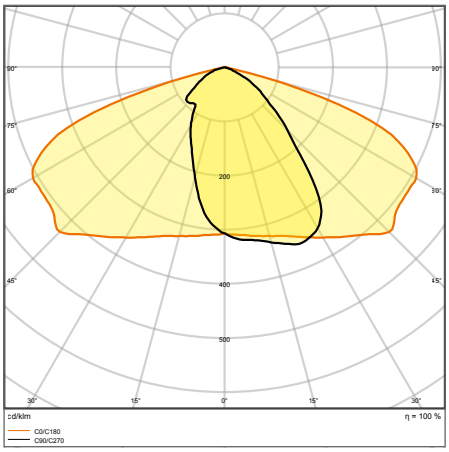

SL FLEX MD RV25ST P 80W 740 WAL

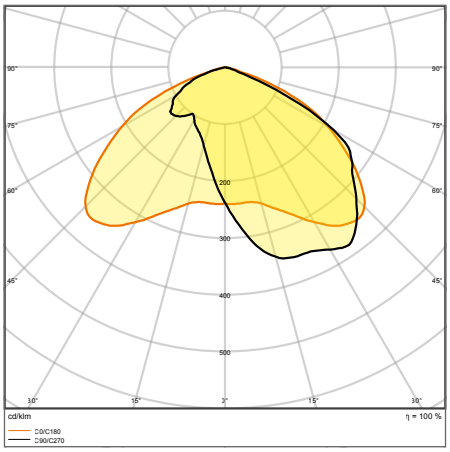

SL FLEX MD RW35ST P 80W 740 WAL

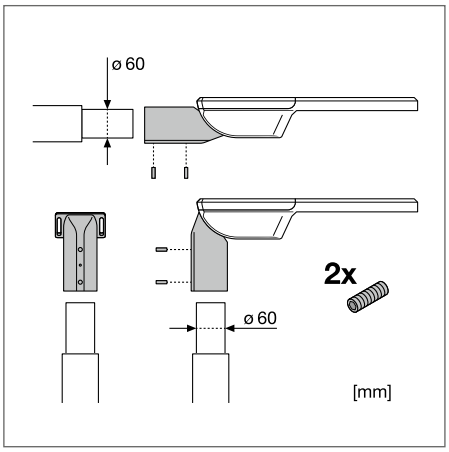

The pictures shown in the catalog are for illustration purposes only. For information on size and color, please refer to the product table.

STREETLIGHT FLEX MEDIUM RV25ST

Very wide light distribution for general road lighting

PERFOR-MANCE CLASS

FLICKER VALUE ≤10% | IP66 | IK08 | LEDVANCE 5 year guarantee [1]

Product name	EAN (GTIN)	El.nr.	W	lm	lm/W	K	L90 [2]	°	CRI	L × W × H [mm] Ø × H [mm]
SL FLEX MD RV25ST P 58W 727 WAL	4058075**552326**	**3503509**	58	7750	134	2700	100000	25 × 145	70	496 × 250 × 90
SL FLEX MD RV25ST P 58W 730 WAL	4058075**552333**	**3503510**	58	8250	142	3000	100000	25 × 145	70	496 × 250 × 90
SL FLEX MD RV25ST P 58W 740 WAL	4058075**552340**	**3503511**	58	8500	147	4000	100000	25 × 145	70	496 × 250 × 90
SL FLEX MD RV25ST P 80W 727 WAL	4058075**552357**	**3503512**	80	10550	132	2700	100000	25 × 145	70	496 × 250 × 90
SL FLEX MD RV25ST P 80W 730 WAL	4058075**552371**	**3503513**	80	11400	143	3000	100000	25 × 145	70	496 × 250 × 90
SL FLEX MD RV25ST P 80W 740 WAL	4058075**552395**	**3503514**	80	11650	146	4000	100000	25 × 145	70	496 × 250 × 90

STREETLIGHT FLEX MEDIUM RW35ST

Wide light distribution optimized for wider roads and area lighting

PERFOR-MANCE CLASS

FLICKER VALUE ≤10% | IP66 | IK08 | LEDVANCE 5 year guarantee [1]

Product name	EAN (GTIN)	El.nr.	W	lm	lm/W	K	L90 [2]	°	CRI	L × W × H [mm] Ø × H [mm]
SL FLEX MD RW35ST P 80W 727 WAL	4058075**552364**	**3503515**	80	10500	131	2700	100000	35 × 135	70	496 × 250 × 90
SL FLEX MD RW35ST P 80W 730 WAL	4058075**552388**	**3503516**	80	11300	141	3000	100000	35 × 135	70	496 × 250 × 90
SL FLEX MD RW35ST P 80W 740 WAL	4058075**552401**	**3503517**	80	11500	144	4000	100000	35 × 135	70	496 × 250 × 90

[1] Refer to www.ledvance.com/guarantee for precise conditions
[2] t[h]: L90 / B10 @ 25 °C (T_a)

STREETLIGHT FLEX LARGE

IP66 streetlight with up to 155 lm/W

PRODUCT FEATURES

- High luminous efficacy: up to 155 lm/W
- Very long lifetime (L90/B10): up to 100 000 h (at 25 °C)
- Spigot included, suitable for 48…60 mm diameter poles
- Adjustable spigot for both side-entry and post-top installation
- +/–15° tilt angle adjustment without opening the housing

PRODUCT BENEFITS

- Durable IP66 & IK08 design and highest quality component selection for long lasting performance
- Easy installation due to tool-free housing opening and push button wiring terminal
- High light uniformity
- No upper light output ratio (ULOR 0 %) when mounted at 0° tilt
- 5 years guarantee

AREAS OF APPLICATION

- Outdoor use (IP66)
- M-, C- and P-class roads acc. to EN 13201
- Parking
- Public areas
- Industry

EQUIPMENT / ACCESSORIES

- Spigot for 42 and 76 mm poles available separately

FURTHER PRODUCT DETAILS

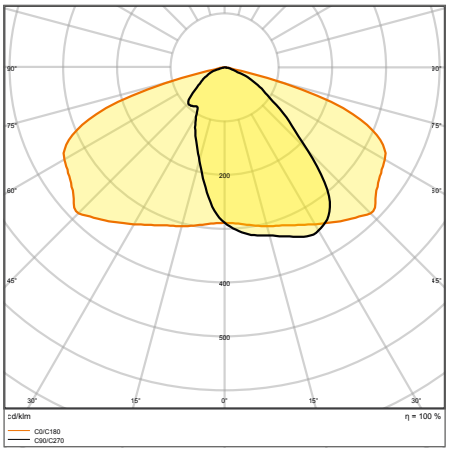

SL FLEX LA RV25ST P 158W 740 WAL

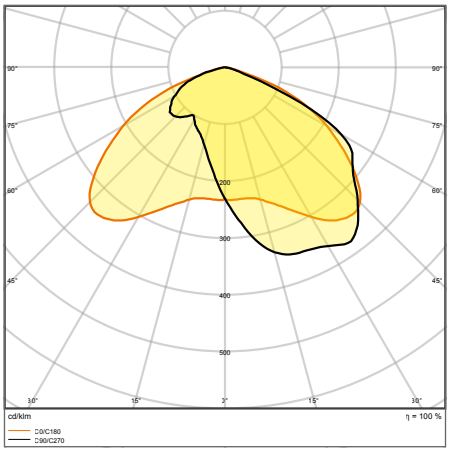

SL FLEX LA RW35ST P 158W 740 WAL

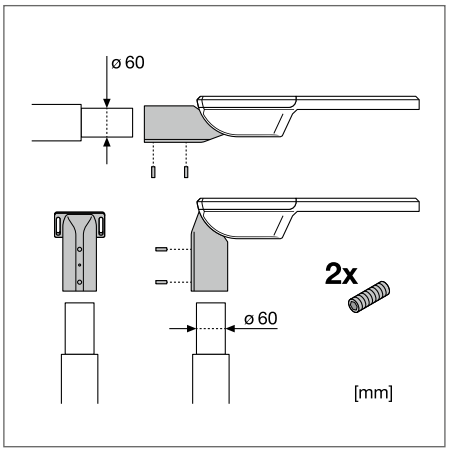

The pictures shown in the catalog are for illustration purposes only. For information on size and color, please refer to the product table.

STREETLIGHT FLEX LARGE RV25ST

Very wide light distribution for general road lighting

PERFOR-MANCE CLASS

FLICKER VALUE ≤10%

IP66

IK08

LEDVANCE 5 year guarantee [1]

Product name	EAN (GTIN)	El.nr.	W	lm	lm/W	K	L90 [2]	°	CRI	L × W × H [mm] Ø × H [mm]
SL FLEX LA RV25ST P 110W 727 WAL	4058075**552418**	**3503518**	110	15250	139	2700	100000	25 × 145	70	617 × 300 × 90
SL FLEX LA RV25ST P 110W 730 WAL	4058075**552432**	**3503519**	110	16500	150	3000	100000	25 × 145	70	617 × 300 × 90
SL FLEX LA RV25ST P 110W 740 WAL	4058075**552456**	**3503520**	110	16800	153	4000	100000	25 × 145	70	617 × 300 × 90
SL FLEX LA RV25ST P 158W 727 WAL	4058075**552470**	**3503521**	158	21150	134	2700	100000	25 × 145	70	617 × 300 × 90
SL FLEX LA RV25ST P 158W 730 WAL	4058075**552494**	**3503522**	158	23350	148	3000	100000	25 × 145	70	617 × 300 × 90
SL FLEX LA RV25ST P 158W 740 WAL	4058075**552517**	**3503523**	158	24450	155	4000	100000	25 × 145	70	617 × 300 × 90

STREETLIGHT FLEX LARGE RW35ST

Wide light distribution optimized for wider roads and area lighting

PERFOR-MANCE CLASS

FLICKER VALUE ≤10%

IP66

IK08

LEDVANCE 5 year guarantee [1]

Product name	EAN (GTIN)	El.nr.	W	lm	lm/W	K	L90 [2]	°	CRI	L × W × H [mm] Ø × H [mm]
SL FLEX LA RW35ST P 110W 727 WAL	4058075**552425**	**3503524**	110	15200	138	2700	100000	35 × 135	70	617 × 300 × 90
SL FLEX LA RW35ST P 110W 730 WAL	4058075**552449**	**3503525**	110	16350	149	3000	100000	35 × 135	70	617 × 300 × 90
SL FLEX LA RW35ST P 110W 740 WAL	4058075**552463**	**3503526**	110	16650	151	4000	100000	35 × 135	70	617 × 300 × 90
SL FLEX LA RW35ST P 158W 727 WAL	4058075**552487**	**3503527**	158	21000	133	2700	100000	35 × 135	70	617 × 300 × 90
SL FLEX LA RW35ST P 158W 730 WAL	4058075**552500**	**3503528**	158	23200	147	3000	100000	35 × 135	70	617 × 300 × 90
SL FLEX LA RW35ST P 158W 740 WAL	4058075**552524**	**3503529**	158	23900	151	4000	100000	35 × 135	70	617 × 300 × 90

[1] Refer to www.ledvance.com/guarantee for precise conditions
[2] t[h]: L90 / B10 @ 25 °C (T_a)

STREETLIGHT FLEX ACCESSORIES

Mounting accessories for STREETLIGHT FLEX luminaires

1

2

- Larger pole adapter, suitable for 76 mm poles
- Reduction piece, enabling the standard adapter for installation at 42 mm poles
- Suitable for all Streetlight Flex types

FURTHER PRODUCT DETAILS

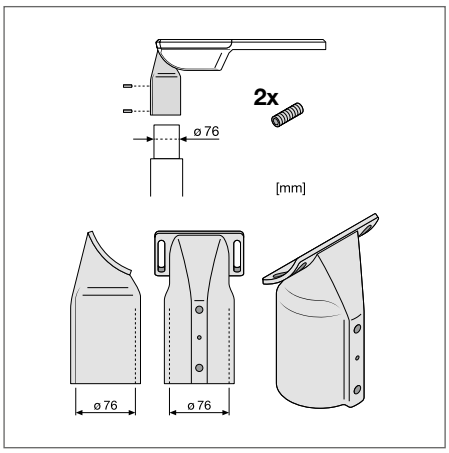

ADAPTER FOR 76 MM POLES

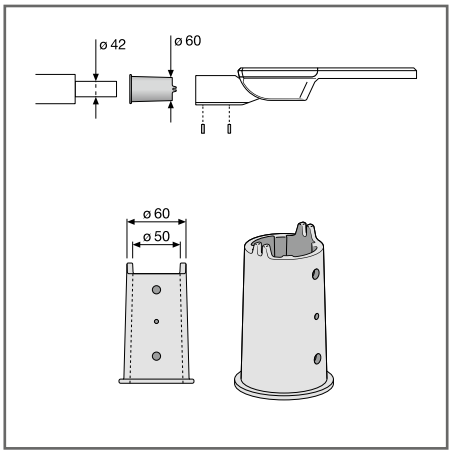

REDUCTION ADAPTER FOR 42 MM POLES

LEDVANCE 5 year guarantee [1]

Product name	EAN (GTIN)	El.nr.	L × W × H [mm] Ø × H [mm]	MATERIAL	COLOR	No.
SL FLEX SPIGOT 76MM WAL	4058075**552531**	**1311980**	191 × 114 × 91	Aluminum	White Aluminum	1
SL FLEX REDUCTION 60 TO 42MM WAL	4058075**552579**	**1311981**	76 × 122	Aluminum	White Aluminum	2

[1] Refer to www.ledvance.com/guarantee for precise conditions
The pictures shown in the catalog are for illustration purposes only. For information on size and color, please refer to the product table.

P

EMERGENCY LIGHTING

SAFETY: A QUESTION OF LIGHT

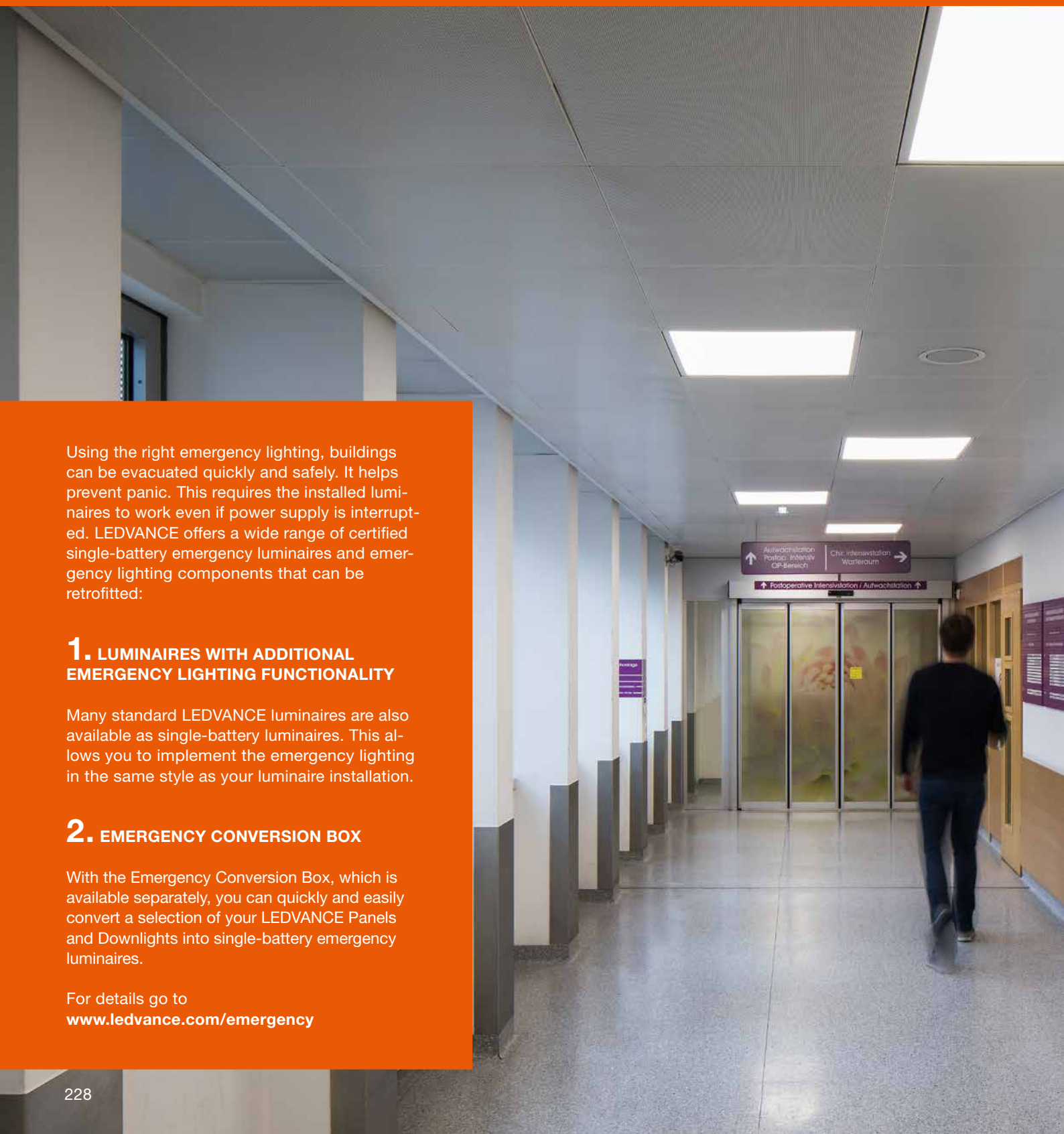

Using the right emergency lighting, buildings can be evacuated quickly and safely. It helps prevent panic. This requires the installed luminaires to work even if power supply is interrupted. LEDVANCE offers a wide range of certified single-battery emergency luminaires and emergency lighting components that can be retrofitted:

1. LUMINAIRES WITH ADDITIONAL EMERGENCY LIGHTING FUNCTIONALITY

Many standard LEDVANCE luminaires are also available as single-battery luminaires. This allows you to implement the emergency lighting in the same style as your luminaire installation.

2. EMERGENCY CONVERSION BOX

With the Emergency Conversion Box, which is available separately, you can quickly and easily convert a selection of your LEDVANCE Panels and Downlights into single-battery emergency luminaires.

For details go to
www.ledvance.com/emergency

STANDARD LUMINAIRES WITH EMERGENCY LIGHTING FUNCTIONALITY

1

SURFACE BULKHEAD EM

PANEL INDIVILED EM

DAMP PROOF LED EM

DAMP PROOF HOUSING EM

LINEAR SURFACE IP44 EM

TRUSYS FLEX EM

LINEAR ULTRA OUTPUT EM

LEDVANCE OFFERS AN EXTENSIVE PORTFOLIO OF SINGLE-BATTERY EMERGENCY LUMINAIRES

- Emergency luminaires certified to EN 60598-2-22
- Integrated automatic test function for simple testing of emergency lighting operation
- Emergency lighting and battery status display by means of integrated status LED
- Emergency lighting operated on a long-life LiFePO4 battery (3 h discharge time)

For details of the available EANs see the relevant product sections of the luminaires displayed.

LUMINAIRE UPGRADES WITH THE EMERGENCY CONVERSION BOX

2

Using our Emergency Conversion Box, certified luminaires can be equipped with single-battery emergency functionality. An up to date compatibility list is available through our website.

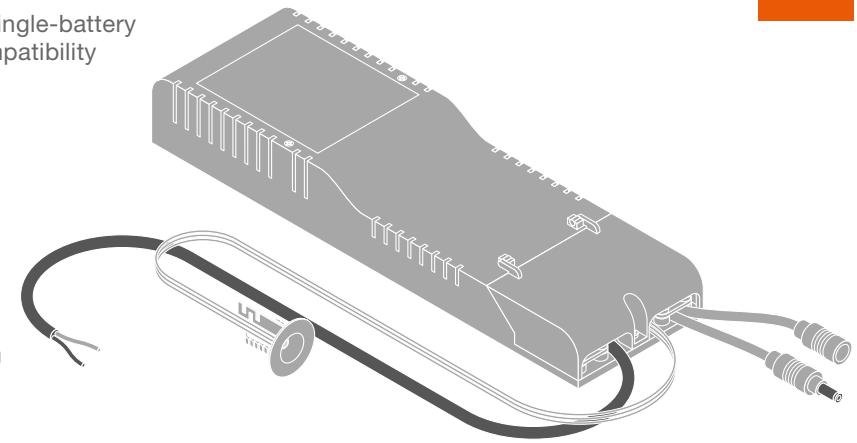

YOUR BENEFITS OF UPGRADING WITH THE EMERGENCY CONVERSION BOX:

- Plug-and-play system allows easy installation and quick conversion of existing luminaires
- Emergency lighting module reduces warehousing complexity for emergency luminaires
- Integrated automatic test function for simple testing of emergency lighting operation
- Emergency lighting operated on a long-life LiFePO4 battery (3 h discharge time)

DAMP PROOF LED EMERGENCY: PLANNING EXAMPLE FOR ANTI-PANIC AND ESCAPE ROUTE LIGHTING

DAMP PROOF LED EM

For more information and planning aids for emergency luminaires see the eCatalog at **www.ledvance.com/professional**

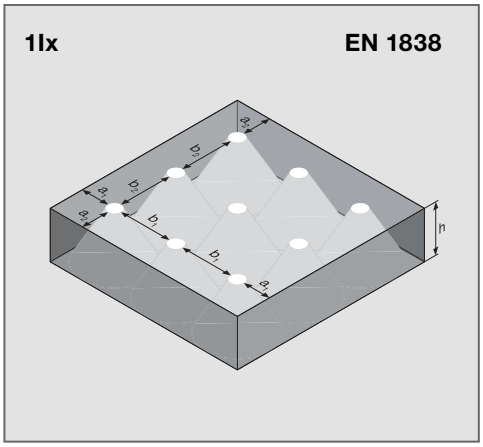

ANTI-PANIC LIGHTING

h [m]	a_1 [m]	b_1 [m]	a_2 [m]	b_2 [m]
2.5	4.0	9.5	4.0	9.0
3.0	4.5	10.0	4.5	9.5
3.5	5.0	10.5	5.0	10.0
4.0	5.5	11.0	5.5	10.5

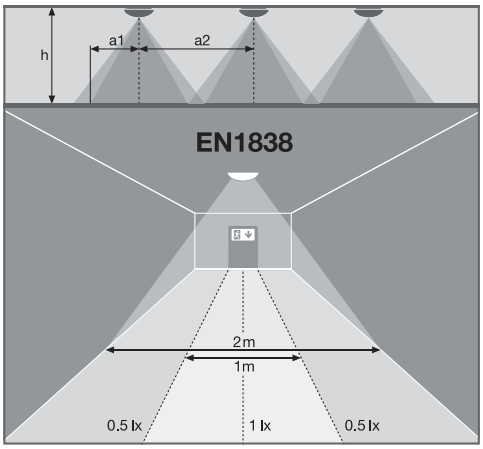

ESCAPE ROUTE LIGHTING

h [m]	a_1 [m]	a_2 [m]
2.5	4.0	9.0
3.0	4.5	9.5
3.5	5.0	10.0
4.0	5.5	10.5

EMERGENCY CONVERSION BOX

Emergency conversion box to convert recessed luminaires to self-contained emergency luminaires

- Self-contained emergency conversion unit
- Function test of emergency lighting: automatic (AT)
- Battery technology: LiFePO4
- Recessed ceiling mounting
- Conversion of selected LEDVANCE panels and downlights to emergency luminaires
- Emergency conversion unit reduces stock keeping complexity from emergency lighting
- Plug-and-play system allows easy installation
- Simple testing of luminaires with emergency lighting function thanks to integrated automatic test function
- Operation of integrated emergency lighting function with long life LiFePO4 battery with 3h battery discharge time

LEDVANCE 3 year guarantee [1]

Product name	EAN (GTIN)	El.nr.	L × W × H [mm] Ø × H [mm]	MATERIAL	COLOR	
EM Conversion Box	4058075**237025**	**3242482**	292 × 81 × 41	—	—	1

EMERGENCY LIGHTING PROPERTIES

Product name	Battery life in emergency operation mode	Type of emergency operation test	Type of emergency light operation	Luminous flux in emergency operation mode	Type of Battery
EM Conversion Box	3h	Automatic	Maintained/Non-maintained	300...480 lm (depending on the luminaire)	LiFePO4

[1] Refer to www.ledvance.com/guarantee for precise conditions
The pictures shown in the catalog are for illustration purposes only. For information on size and color, please refer to the product table.

HIGH-QUALITY, COMPACT AND EFFICIENT
LEDVANCE LED DRIVERS FOR CONSTANT CURRENT

LEDVANCE also offers the right solution for integration in LED luminaires or operation of independent indoor downlighting/ spotlighting with its drivers for constant current (CC).

The wide range of high-quality SELV-insulated LEDVANCE constant current LED drivers with output currents of 250 mA to 1 400 mA provides you with solid options for operating virtually all standard LED modules. Flexible power settings allow for correct integration in different LED luminaires. Leading-edge and trailing-edge phase cut options are available for dimming applications. The compact housing design, optional cable clamps and simple wiring make installation quick and easy even in tight spaces, reducing your installation time and costs. The life of up to 50 000 hours is another strong argument.

NAMING OF THE CC DRIVERS

The names of the CC drivers reveal their properties:

DR	DS	PFM	–	25	/	220-240	/	700	10 × 1 LEDV
LED DRIVER (DR)	DIP-Switch (DS) Phase Cut (PC) ON/OFF	Segmentation SUPERIOR (SUP) PERFORMANCE (PFM) VALUE (VAL)		Nominal wattage (W)		Nominal input voltage range (V)		Nominal output current (mA)	Packaging and brand

LED DRIVER DALI PERFORMANCE G2

Compact constant current LED driver with DALI dimming interface

1

2

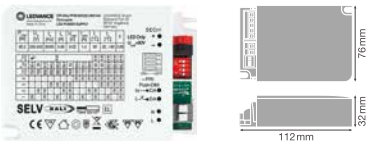

3

PRODUCT BENEFITS

- Low flickering enables high light quality as well as good visual comfort
- Push DIM application for easy control
- High-quality dimming of 1…100 %
- Flexible dip switch current settings in 50 mA steps
- Toolless installation

AREAS OF APPLICATION

- Suitable for indoor SELV installations
- Suitable for use in emergency lighting systems (DC capable)
- Attachment and installation in furniture
- Linear lighting for office, education, storage areas and retail

PERFORMANCE CLASS · M M · UN-PROTECTED · DIM · CC 150–1400 mA · DALI-2 · IP 20 · LEDVANCE 5 year guarantee[1]

Product name	EAN (GTIN)	El.nr.	W	V	V_{OUT}	Hz	$I_{[mA]}$
DR DALI-PFM-26/220-240/700	4058075**779631**	—	26	220…240	9…52	50/60	150/200/250/300/350/400/450/500/550/600/650/700
DR DALI-PFM-44/220-240/1050	4058075**779723**	—	44	220…240	9…52	50/60	700/750/800/850/900/950/1000/1050
DR DALI-PFM-60/220-240/1A4	4058075**779662**	—	60	220…240	9…52	50/60	700/750/800/850/900/950/1000/1050/1100/1200/1250/1300/1350/1400

Product name		W	$t_{[h]}$[2]	Ta	Tc	PROTECTION CLASS	L × W × H [mm] Ø × H [mm]	No.
DR DALI-PFM-26/220-240/700	+/– 5	1…100	50000	–20…+50	85	II	98 × 44 × 32	1
DR DALI-PFM-44/220-240/1050	+/– 5	1…100	50000	–20…+50	90	II	98 × 44 × 32	2
DR DALI-PFM-60/220-240/1A4	+/– 5	1…100	50000	–20…+50	90	II	112 × 76 × 32	3

EQUIPMENT/ACCESSORIES

Product name	DR AY ZB+DALI CLAMP DUO
Description	—
GTIN (EAN)	4058075**483125**
L × W × H [mm]	52.5 × 76 × 32

Product name	DR AY ZB+DALI CLAMP
Description	—
GTIN (EAN)	4058075**483149**
L × W × H [mm]	50 × 44 × 32

[1] Refer to www.ledvance.com/guarantee for precise conditions
[2] At maximum T_c = 75°C / 10% failure rate
The pictures shown in the catalog are for illustration purposes only. For information on size and color, please refer to the product table.

LED DRIVER PHASE-CUT PERFORMANCE

Constant current LED driver with phase-cut dimming interface

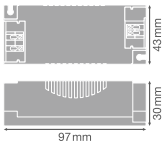

1

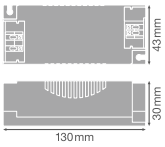

2

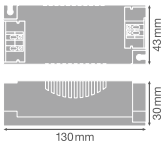

3

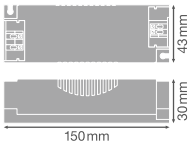

4

PRODUCT BENEFITS

- Enables installation with commonly used leading-edge and trailing-edge dimmers
- 5 years guarantee
- Slim housing for narrow installations
- High efficiency and reliability

AREAS OF APPLICATION

- Suitable for LED luminaires and LED modules
- Applicable for luminaires of protection classes I and II
- For indoor SELV installations
- Offices, shopping centers, hospitals, restaurants, hotels

PERFOR-MANCE CLASS | TÜV SÜD | UN-PROTECTED | PHASE CUT | DIM | CC 350 / 700 mA | IP 20 | LEDVANCE 5 year guarantee [1]

Product name	EAN (GTIN)	El.nr.	W	V	V_{OUT}	Hz	$I_{[mA]}$	THD
DR PC-PFM-13/220-240/350	4058075**239814**	**6603418**	13	220…240	17…36	50/60	350	< 5
DR PC-PFM-18/220-240/350	4058075**239838**	**6603419**	18	220…240	32…54	50/60	350	< 5
DR PC-PFM-25/220-240/700	4058075**239852**	**6603420**	25	220…240	20…36	50/60	700	< 5
DR PC-PFM-35/220-240/700	4058075**239876**	**6603421**	35	220…240	30…50	50/60	700	< 5

Product name	W	$t_{[h]}$ [2]	Ta	Tc	PROTECTION CLASS	L × W × H [mm] Ø × H [mm]	No.
DR PC-PFM-13/220-240/350	10…100	50000[a]	–20…+50	75	II	97 × 43 × 30	1
DR PC-PFM-18/220-240/350	10…100	50000[b]	–20…+50	70	II	130 × 43 × 30	2
DR PC-PFM-25/220-240/700	10…100	50000[a]	–20…+50	75	II	130 × 43 × 30	3
DR PC-PFM-35/220-240/700	10…100	50000[c]	–20…+50	85	II	150 × 43 × 30	4

EQUIPMENT/ACCESSORIES

Product name	DR AY PC-PFM-CLAMP DUO
Description	Cable clamps for Phase-Cut LED Drivers
GTIN (EAN)	4058075**313170**
El.nr.	6603400
L × W × H [mm]	38.3 x 34 x 28.5

[1] Refer to www.ledvance.com/guarantee for precise conditions | [2] a) At maximum T_c = 75°C / 10% failure rate, b) At maximum T_c = 70°C / 10% failure rate, c) At maximum T_c = 85°C / 10% failure rate
The pictures shown in the catalog are for illustration purposes only. For information on size and color, please refer to the product table.

LED DRIVER DIP-SWITCH

Constant current LED driver with dip-switch current setting

1

2

3

PRODUCT BENEFITS

- High flexibility due to adjustable output currents via dip switch
- Low flickering enables high light quality as well as good visual comfort
- 5 years guarantee
- Slim housing for narrow installations
- High efficiency and reliability

AREAS OF APPLICATION

- Suitable for LED luminaires and LED modules
- Applicable for luminaires of protection classes I and II
- Suitable for a broad range of luminaires (by broad range of dip switch currents)
- For indoor SELV installations
- Offices, shopping centers, hospitals, restaurants, hotels

PERFOR-MANCE CLASS

UN-PROTECTED | CC 150 – 1050 mA | IP 20 | LEDVANCE 5 year guarantee [1]

	Product name	EAN (GTIN)	El.nr.	W	V	V_{OUT}	Hz	$I_{[mA]}$	
NEW	DR DS-P-20/220-240/500	4099854**077050**	**6603423**	20	220…240	20…42	50/60	150/200/250/300/350/400/450/500	≤ 5
NEW	DR DS-P-30/220-240/700	4099854**077081**	**6603424**	30	220…240	25…42	50/60	350/400/450/500/550/600/650/700	≤ 5
NEW	DR DS-P-40/220-240/1A0	4099854**077111**	**6603425**	42	220…240	25…40	50/60	700/750/800/900/950/1000/1050	≤ 5

Product name	$t_{[h]}$ [2]	T_a	T_c	PROTECTION CLASS	L × W × H [mm] Ø × H [mm]	No.
DR DS-P-20/220-240/500	50000	–20…+50	< 90	II	98 × 44 × 26	1
DR DS-P-30/220-240/700	50000	–20…+50	< 80	II	98 × 44 × 26	2
DR DS-P-40/220-240/1A0	50000	–20…+50	85	II	98 × 44 × 26	3

EQUIPMENT/ACCESSORIES

Product name	DR AY DS-P-CLAMP DUO
Description	Cable clamps for DIP-Switch LED Drivers
GTIN (EAN)	4099854**077937**
El.nr.	6603422
L × W × H [mm]	35 × 35 × 24

[1] Refer to www.ledvance.com/guarantee for precise conditions | [2] At maximum T_c = 75°C / 10% failure rate
The pictures shown in the catalog are for illustration purposes only. For information on size and color, please refer to the product table.

QUICK & EASY

TAILOR-MADE CALCULATIONS – WITH OUR FAST LIGHT CALCULATION TOOL OR DIALUX/RELUX

We have put together our tools and services for achieving accurate calculations for your projects. Do you want quick information from the Fast Light Calculation Tool or detailed professional planning with DIALux and RELUX? We'll give you individual advice and, together with you, we'll plan the optimum lighting for your complete project.

FAST LIGHT CALCULATION TOOL

With the handy calculation tool on our website, we offer installers and lighting professionals a quick and easy way to plan lighting projects successfully. The results are compiled in a PDF document which you can attach to your email tenders, for example. For more information go to **ledvance.com/flct**

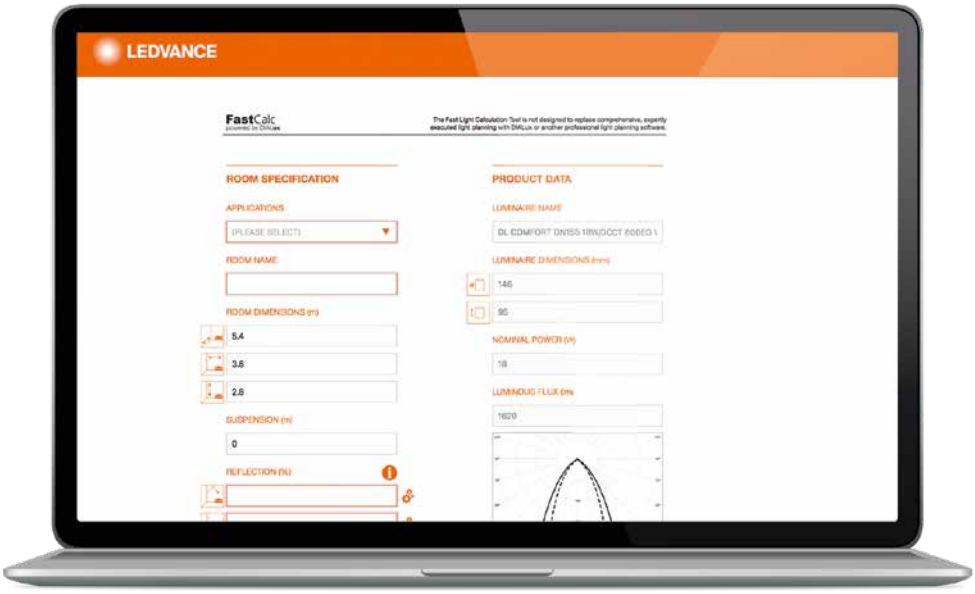

THE INFORMATION PROVIDED BY THE TOOL INCLUDES THE FOLLOWING:

- Number of luminaires needed
- Floor plan showing the distribution of the luminaires
- Illuminance, total power (W) and specific load (W/m²)
- Light distribution curve for every luminaire

MORE BENEFITS FOR YOU:

- Intuitive operation of the tool
- Preselection of application areas with minimum lux values
- Info boxes explaining the values to be entered
- Generation of a final PDF with the results, including a floor plan showing the distribution of the luminaires

The Fast Light Calculation Tool is no substitute for comprehensive professional planning with DIALux or any other professional light planning software.

PROFESSIONAL

DIALUX AND RELUX

Good news for DIALux and RELUX users: Since the start of 2018 LEDVANCE has been working with the software producers. DIALux and RELUX users can now easily integrate LEDVANCE products in their lighting plans. Our luminaire data is also BIM-compatible.

We also support users with customized advice on planning their lighting systems and offer tailored solutions for an extremely wide variety of lighting requirements – all entirely from a single source.

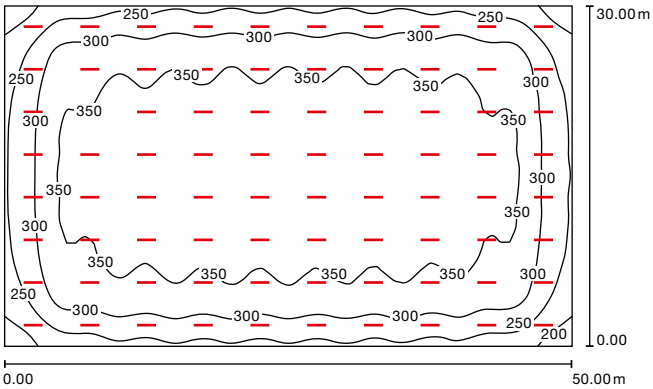

Values in lux, scale 1:386
Specific connected power:
2.67 W/m² = 0.82 W/m²/100 lx
(Floor area: 1 500 m²)

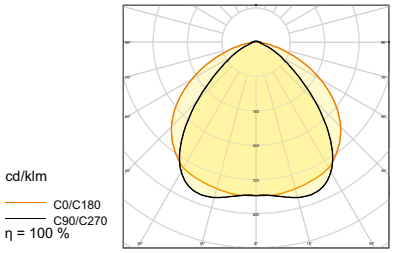

SAMPLE DIALUX CALCULATION WITH TRUSYS PFM 50 W/4000 K

ROOM DEFINITION
Industrial storage

ROOM DIMENSIONS
- Floor area: 1 500 m²
- Ceiling height: 8 m
- Installation height: 7 m

REFLECTANCE
- Ceiling: 70 %
- Walls (4): 50 %
- Flooring: 20 %

BASIS FOR CALCULATION
- Relevant standard DIN EN12464-1
- Required illuminance Em: 300 lx
- Required uniformity Emin / Em: 0.40
- Maintenance factor: 0.80
- Boundary zone: 0.00 m

RESULTS: ILLUMINANCE IN THE STORAGE ROOMS

Area	Average (target)	Min	Max	Uniformity Emin/Em (target)
work level, storage space	**325 lx** (300 lx)	168 lx	385 lx	**0.516** (0.4)

YOUR BENEFITS AT A GLANCE

Tailored calculation for accurate planning of your project:

- Uniformly good light distribution
- Precise wattage per sqm
- Maximum efficient calculation of required number of luminaires

See for yourself.

CASE STUDY:

EDUARDO TORROJA INSTITUTE OF CONSTRUCTION

THE MOST IMPORTANT FACTS AT A GLANCE:

- Over 800 new LED luminaires and lamps installed
- Modernization of lighting technology with a seamless integration into existing in-house control system
- Increased efficiency, enhanced light quality and reduced maintenance costs
- Compliance with workplace safety and energy efficiency regulations

SCIENCES

MODERN LED SOLUTIONS FROM A SINGLE SOURCE

The Eduardo Torroja Institute of Construction Sciences (IETCC) in Madrid focuses on scientific research and technological advancements in construction and materials. To modernize its lighting while preserving the original architectural design and identity, the institute sought to retrofit the historic buildings with energy-efficient LED technology and integrate them into the building's control system.

LEDVANCE successfully upgraded the lighting system in the buildings with over 800 modern LED luminaires and lamps, for example in entrance halls, stairwells, corridors, outside areas, the canteen and executive lobby. This modernization has ensured compliance with workplace safety and energy efficiency regulations, while providing the client with enhanced light quality and reduced maintenance expenses.

PROJECT:

Upgrade to efficient LED lighting in the historic institute building

VERTICAL: Facility management – Educational institutions
APPLICATION: Lighting for office and industrial
TECHNOLOGY: LED technology

LEDVANCE PRODUCTS:

LED Panel Comfort 1200

LED Tracklight Spot Zoom Dim

LED Damp Proof

LED Surface Compact

GOOD LIGHT ALL ROUND
THE FULL LEDVANCE RANGE

LEDVANCE offers a wide portfolio of energy-efficient and future-proof lighting solutions. Whether you need luminaires, lamps, HCL systems, electronic components, light management systems or smart residential products, LEDVANCE is your expert partner for complex lighting projects. You can always rely on LEDVANCE for excellent brand quality, professional service and a good price/performance ratio.

FUNCTIONAL AESTHETIC LUMINAIRES

The extensive luminaire portfolio covers virtually all professional and residential applications and delivers outstanding quality and functionality. LEDVANCE provides a constantly growing number of luminaires that communicate via DALI standard or Zigbee protocol. When using the right control units even IoT functionalities via cloud services are possible. Our systems provide users with tunable white light according to their personal preferences or even biologically effective light for more well-being. VIVARES is the umbrella brand for all those light management options available from one single source.

HIGHLY EFFICIENT LAMPS

Our new professional LEDVANCE LED lamp portfolio offers you a comprehensive selection of shapes and base sizes as well as types with additional functions (e.g. sensors) to cover a wide variety of demands – all EU-compliant, future-proof, energy-efficient and cost-effective.

FLEXIBLE LED STRIP SYSTEM

The LED Strip System comprises a large number of flexible LED strips, drivers and matching accessories. With a wide range of luminous fluxes and light colors, the system allows bespoke lighting solutions. And with our Cut on Demand service we design customer-specific project solutions for virtually any indoor or outdoor application. Easy to plan, easy to combine and easy to install – that's the principle here.

LIGHT MANAGEMENT IS VIVARES

With the VIVARES light management systems (LMS), LEDVANCE offers everyhting you need for optimizing your light and saving energy, CO_2 and costs at the same time. Both floor solutions up to 1 000 m^2 and single room solutions up to 200 m^2 are covered by the exactly fitting LMS components and compatible light sources. The systems are simple in configuration and commissioning from plug and play to more complex, customizable solutions or app control and come with a 5-year guarantee. Light management is easy – with all components coming from one single source.

SMART LIGHTING FOR RESIDENTIAL APPLICATIONS

Our smart residential products offer a comprehensive combination of innovation, quality, reliability and user friendliness. We provide a suitable solution for a variety of requirements that intelligent lighting has to meet.

MORE INFORMATION AND CLEVER TOOLS

Go to ledvance.com for more information on LEDVANCE's extensive product portfolio, clever apps and tools that will help you in your day-to-day work.
www.ledvance.com

WHENEVER AND WHEREVER: THE ONLINE PORTAL WITH ALL THE INFORMATION, ADVICE AND EXPERTISE

Are you looking for information about our products and services? LEDVANCE always keeps you up to date: at wholesalers, through our sales employees or via our Customer Service Center (email: contact@ledvance.com). Here you'll find an overview of our competencies, databases and tools.

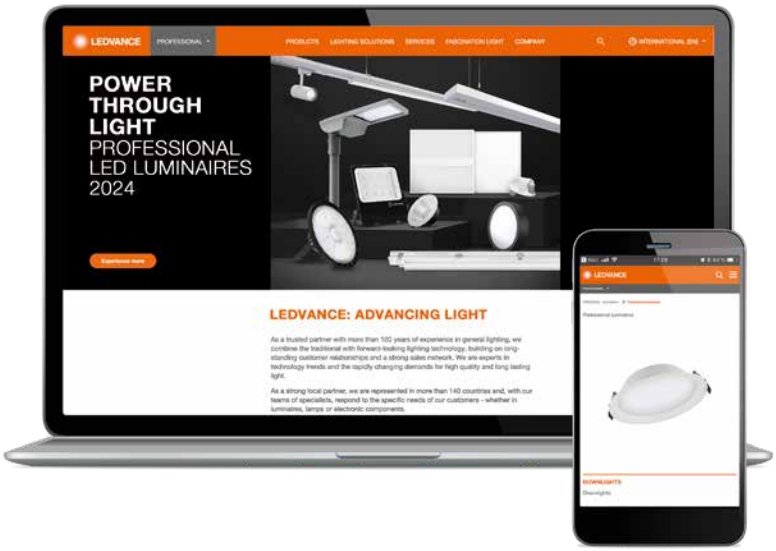

- **PERFECTLY FILTERED**
  Use the online filters to find precisely what you're looking for in our luminaire portfolio – type of mounting, IP rating, light color, etc.: ledvance.com/luminaires
- **REFERENCES PROVIDE INSPIRATION**
  A selection of some top lighting projects can be found at ledvance.com/projects
- **LEDVANCE SERVICE-PLUS**
  Our specialized sales department supports and advises our commercial end customers – including face-to-face. Find out all you need to know at ledvance.com/vam
- **DOWNLOAD CENTER**
  Catalogs, compatibility overviews, brochures, and much more are available for you in our download center: ledvance.com/download
- **OUR TOOLS FOR YOU**
  From the LED strip system configurator to the TCO calculator for lamps, you will find all the practical tools you need at ledvance.com/tools
- **SERVICE AT A GLANCE**
  You will find a summary of all of our service offerings at ledvance.com/services
- **FIND OUR LATEST NEWS ON:**

THE ONLINE TRAINING PLATFORM

A host of application-oriented eLearnings for professional users, practical advice on installation, integrated standards checks, planning tips, and much more.

Register and find out more at **training.ledvance.com**

FAST LIGHT CALCULATOR

The light calculation tool – calculate your luminaire project requirement really conveniently, taking account of relevant parameters such as room size.[1] Available directly in the e-catalog!

LIGHT CALCULATION WITH DIALUX AND RELUX

DIALux and RELUX users can now also integrate LEDVANCE products really easily into their lighting planning. We also support users through consultancy, calculation and aftersales support.

[1] The Fast Light Calculation Tool is no substitute for comprehensive professional planning with DIALux or any other professional light planning software.

OM LEDVANCE

Med forretningsaktiviteter i over 140 land er LEDVANCE en av verdens ledende selskaper innen generell belysning. Med sitt utspring fra OSRAMs generelle belysning tilbyr LEDVANCE et vidt spekter av LED-lyskilder og -armaturer, intelligente belysningsprodukter, tradisjonelle lyskilder og fornybare energiløsninger.
#POWERTHROUGHLIGHT

LEDVANCE

LEDVANCE AS
Fornebuveien 5
1366 Lysaker
Norge

05/2024 LEDVANCE EU-W MK TRA Kan endres uten varsel. Med forbehold om feil og utelatelser.

LEDVANCE.NO